CONSTRUCTION SPECIFICATIONS

FOR

MUNICIPAL PUBLIC WORKS IMPROVEMENTS

BISMARCK, NORTH DAKOTA

Prepared by

Bismarck Engineering Department

221 NORTH FIFTH STREET
P.O. BOX 5503
BISMARCK, ND 58506-5503
Melvin J. Bullinger, P.E., City Engineer

February 1969
Revised March 2012

NOTE/DISCLAIMER
The specifications represented in this document are in accordance with established City of Bismarck civil engineering practices and are an electronic facsimile of the specifications on file in the City of Bismarck Engineering Department. However, neither the City of Bismarck nor its employees can or do warranty these specifications to be the complete specifications for any or all City of Bismarck civil construction projects. The specification document, together with all addendums listed in each construction project specifications, shall be the project specifications for the City of Bismarck civil engineering projects.

CONTENTS

SECTION

SECTION 100 – GENERAL PROVISIONS

101 Form of Proposal and Signature

102 Proposals

103 Bidders Bond

104 Award and Contract Security

105 Engineer

106 Contractor

107 Character of Workmen

108 Location Conditions

109 Methods and Appliances

110 Delays

111 Damages

112 Utilities

113 Changes

114 Quantities

115 Subcontracting

116 Monuments, Bench Marks, Witness, and Grade Stakes

117 Patents

118 Estimates and Payments

119 Time of Beginning and Completion of Work

120 Contractor's Responsibilities

121 Finishing and Cleanup

122 Warranty

123 Liquidated Damages

124 Traffic Control Devices

125 Transportation of Materials

126 Extra Work

127 Final Payment

128 Contractor's Insurance

129 Observation and Testing

130 Indemnity Agreement for Contractors

131 Conformity with Plans and Specifications

132 Several Contracts on Same Site

133 Protection of Trees

134 Debarment Certification

135 Shop Drawings

136 Erosion Control and Tracking

137 City Conductor Damage

138 Request for Alternate Specifications

139 Street Sign Remove and Reinstall

SECTION 200 – EARTHWORK

201 Clearing and Grubbing

202 Excavation and Embankment

203 Watering

204 Subgrade Preparation

205 Erosion and Sediment Control

SECTION 300 – BASE COURSES

301 Sand Sub-Base

302 Aggregate Base and Aggregate Surface

302 (Blank)

303 AC Stabilized Base

304 Mix In-Place Base Course

SECTION 400 – FLEXIBLE SURFACE COURSES

401 AC Patch, Leveling, and Surface Courses

402 Bituminous Prime or Tack Coat

403 Bituminous Seal

404 Milling Pavement Surface

405 Crack Treatments

SECTION 500 – RIGID PAVEMENT

501 Portland Cement Concrete Pavement

502 Pozzolonic Portland Cement Concrete

503 Controlled Density Fill

SECTION 600 – CONCRETE SIDEWALKS, DRIVEWAYS, CURB AND COMBINED CURB AND GUTTER

601 Concrete Sidewalks

602 Concrete Driveways

603 Concrete Curb and Combined Curb and Gutter

SECTION 700 – STRUCTURES

701 Structural Portland Cement Concrete

SECTION 800 – SEWERS

801 Sanitary Sewers

802 Storm Sewers

SECTION 900 – WATER DISTRIBUTION

901 Water Mains

SECTION 1000 – ELECTRICAL

1001 General Specifications for Street Light Construction

SECTION 1100 (BLANK)

SECTION 1200 - MISCELLANEOUS CONSTRUCTION

1201 Topsoil

1202 Seeding

1203 Sodding

1204 Mulching

1205 Manholes & Inlets

1206 Castings & Adjustment

1207 (Blank)

1208 Chain Link Fencing

1209 Sanitary Sewer & Water Main Service Connections

1210	Pavement Marking
1211	Traffic Control
1212	Highway Signs and Posts

STANDARD DETAILS

200-1	Typical Grading Sections
200-2	Silt Fence
400-1	AC Patch
400-2	Crack Seal
500-1	Concrete Joints
500-2	Full Depth Slab Repair
600-1	Standard Concrete Sidewalk
600-2	Commercial Concrete Sidewalk
600-3	Type 1 and 2 Curb Ramps
600-4	Residential Curb Ramps
600-5	Sidewalk Trench Drain
600-6	Drop Curb Driveway
600-7	Dividing Driveways - (Sheet 1 of 2)
600-8	Dividing Driveways - (Sheet 2 of 2)
600-9	Radius Driveway
600-10	Commercial Driveway
600-11	Mountable Curb and Gutter
600-12	Standard Curb, Curb and Gutter
600-13	Reinforced Curb and Gutter

600-14	Mountable Curb and Gutter with Inlet
600-15	Intersection Curve
600-16	Valley Gutter
600-17	Standard Curb and Gutter with Inlet
801-1	Cleanout Detail
801-2	Pipe Bedding Quantities - Sanitary Sewer
802-1	Pipe Bedding Quantities - Storm Sewer
802-2	HDPE to Reinforced Concrete Pipe Connection Detail
900-1	Concrete Thrust Blocking
900-2	Water Main Payment Diagram
900-3	Pipe Bedding Quantities - Water
1205-1	Sanitary Sewer Manhole
1205-2	Sanitary Sewer Drop Manhole
1205-3	Storm Sewer Manhole
1205-4	Cast In Place Storm Sewer Manhole
1205-5	Type 24" Inlet/Manhole and Type 24" Inlet
1205-6	Type 36" and Type 72" Inlet - (Sheet 1 of 2)
1205-7	Type 36" and Type 72" Inlet - (Sheet 2 of 2)
1205-8	Roof Slab for Type 36" and 72" Inlet With Type 24" Casting
1205-9	Slotted Drain Inlet - (Sheet 1 of 2)
1205-10	Slotted Drain Inlet - (Sheet 2 of 2)
1205-11	Air Release Manhole
1206-1	Manhole, Inlet, and Valve Box Adjustment
1206-2	Manhole, Inlet, and Valve Box Adjustment in Concrete

1206-3	Floating Manhole Casting Detail - (Sheet 1 of 2)
1206-4	Floating Manhole Casting Detail - (Sheet 2 of 2)
1208-1	Chain Link Fence and Gates
1212-1	Road Closed, Type III Barricade, Fence Detail
MISC-1	Temporary Curb Mount Detail

STANDARD FORMS

1401-01	Construction Contract
1401-02	Construction Contract
1401-03	Construction Contract
1401-04	Construction Contract
1401-05	Construction Contract
1402-01	Bid Bond
1403-01	Performance Bond
1403-02	Performance Bond
1404-01	Payment Bond
1404-02	Payment Bond
1405-01	Contract Progress Schedule
1406-01	Extra Work Order
1406-02	Extra Work Summary
1406-03	Extra Work - Labor
1406-04	Extra Work - Equipment
1406-05	Extra Work - Materials

SECTION 100

GENERAL PROVISIONS

SECTION 101 – FORM OF PROPOSAL AND SIGNATURE

The proposal must be made on forms provided for that purpose, or forms provided by the bidder which follow the same format, enclosed in a sealed envelope, and marked and addressed as required in the Advertisement. It must state the unit prices and the sum of money for which the bidder proposes to supply the materials and perform the work called for in the Proposal and Schedule of Work. Bidders shall submit a bid on a unit price basis for each item of work so listed in the proposal. The total of all estimated prices will be determined as the sum of the products of the estimated quantity of each item and the unit price bid for the item. If the bid is made by an individual, it must be signed with the full name of the bidder whose address must be given. If it is made by a firm, it must be signed in the co-partnership name by a member of the firm, and the name and address of each member of the firm must be given. If it is made by a corporation, it must be signed by an officer of the corporation in the corporate name and the corporate seal must be attached to such signature.

The bidder may substitute a computer-printed spreadsheet bid schedule for the City-furnished Bid Schedule found in the Proposal. The substitute schedule shall be attached to the last page of the City-furnished Bid Schedule in the Bidder's Proposal.

The following information shall appear on top of each page of the computer-printed bid schedule:

1. Improvement District Number or Project Number.

2. Date of Bid Opening.

3. Type, Description of Work (i.e., Sanitary Sewer, Water Main, Storm Sewer, and Incidentals).

4. Page Number.

5. Bidder's Name and Address.

6. Acknowledgement of Addenda.

The substitute bid schedule shall be printed on sheets of approximately the same size as the Bid Schedule in the Proposal, and the words and numerals shall be clear and legible. Each page shall be arranged, numbered, and contain the same bid items as the corresponding Bid Schedule in the Proposal. Column headings shall be the same as those in the City-furnished Bid Schedule.

Each bid item shall be separated from the bid items above and below it by one or more blank spaces. Solid lines for separating columns and items are not required, but dashed lines may be placed either vertically or horizontally.

The total sum of the bid shall be entered in ink at the bottom of the last page of the computer-printed schedule.

The bidder, or authorized representative, shall sign the substitute bid schedule in ink on the last page of the computer printout. The signer's name and title shall be printed below or beside the signature. The person signing the substitute bid schedule above shall also sign and complete the Affidavit in the Bidder's Proposal, as regularly required.

In case of discrepancies between item descriptions or quantities in the City-furnished Bid Schedule in the Proposal and those in the computer-printed bid schedule, the City-furnished Bid Schedule in the Proposal will govern. Any omitted items or missed items will be considered as "zero," and no payment will be considered for that item.

SECTION 102 – PROPOSALS

No bids received after the time set for the receipt of the proposals will be considered. The right is reserved to hold all bids for a period of thirty (30) days and to reject any or all bids. Bidders are invited to be present at the opening of proposals.

SECTION 103 – BIDDER'S BOND

Regardless of the amount of the project, each bid shall be accompanied by a bidder's bond in the amount of five percent (5%) of the amount of the bid meeting the requirements of Section 48-01.1-05 of the North Dakota Century Code as amended.

SECTION 104 – AWARDS AND CONTRACT SECURITY

The bidder to whom the award is made will be required to enter into a written contract with the CITY OF BISMARCK as required by Section 48-01.1-05 of the North Dakota Century Code. Pursuant to NDCC Section 48-02-06.2, simultaneously with the CONTRACTOR's delivery of the executed contract, the CONTRACTOR shall furnish a performance bond in an amount at least equal to one hundred percent (100%) of the total contract amount as security for the faithful performance of the contract and also a payment bond in an amount not less than one hundred percent (100%) of the total contract amount as security for the payment of all persons performing labor on the project under the contract and furnishing materials in connection with the contract.

After the proposals are opened and read, the products of the quantities and the respective unit prices bid and the summation of said products in each proposal will be verified or corrected. In case of discrepancy, the bidder's apparent intent indicated shall govern. Discrepancies between the multiplication of units of Work and unit prices will be resolved in favor of the unit prices. Discrepancies between the indicated sum of any column of figures and the correct sum thereof will be resolved in favor of the correct

sum. Discrepancies between words and figures will be resolved in favor of the words. However, if the bidder's intent is not apparent, the proposal will be rejected. The verified or corrected totals of the proposals considered will be compared and the results of such comparison made public. Until the award of the contract, however, the right will be reserved to reject any and all proposals and to waive technicalities as may be deemed best for the interests of the CITY. All quantities are estimated and shall be equal per each item for comparison of bids per each unit of area. Addenda quantities shall govern over bid proposal quantities which shall govern over plan quantities.

The award of the contract, if made, will be to the lowest responsible bidder whose proposal complies with all the requirements specified. The award, if made, will be made within the time specified in the Advertisement for Bids unless an extension of this limit is agreed to in writing by both parties. In the case of participation in the project by federal and/or state government, or any agency, subdivision, or other participating party, or if concurrence of the aforementioned parties is required by law, any award made by the Board of City Commissioners shall be deemed subject to concurrence of the participating and/or regulatory parties.

Prior to the CITY execution of the contract, the successful (or apparent low) bidder shall submit to the CITY ENGINEER a schedule of proposed progress showing the proposed starting and completion dates and with curves showing the percentage of the major features of the work scheduled for completion at any date together with a composite curve showing the percentage of the entire contract which will be completed at any date. See Standard Form Number 05-01 for a typical "Contract Progress Schedule." The CONTRACTOR may elect to use an approved substantially similar form.

The proposed progress schedule shall show the starting date and the number of working days deemed necessary by the CONTRACTOR to complete the work on or before the completion date shown in the proposal.

The number of working days shown on the progress schedule shall not exceed the number of calendar days, excluding Sundays and holidays, between the proposed starting date and the completion date shown in the proposal.

After the proposed progress schedule, payment and performance bonds, certificate of insurance, and any other required documents have been submitted to the CITY ENGINEER, they will be reviewed and forwarded to the CITY ATTORNEY with a recommendation to execute the contract. By entering into a contract, the CONTRACTOR represents that it has carefully reviewed the plans, specifications, and general and special provisions and has inspected the site conditions and that it has the capability to complete a good and workmanlike project in conformance with the plans, specifications, and general and special provisions.

As provided by the North Dakota statutes, no contract will be awarded to any CONTRACTOR who is not the holder of a current license in the class within which the value of the project falls. A foreign corporation must have a certificate of authority to do business in North Dakota before a contract can be awarded to said corporation.

The CITY OF BISMARCK reserves the right to cancel the award of any contract at any time before the execution of said contract by all parties without any liability against the CITY.

All bidders' bonds, except in case of defaults, will be returned upon request within a reasonable time and as provided by law.

All bidders should note that after the award of the contract to the lowest bidder is approved by the Board of City Commissioners, and the contract is fully executed, ALL bid documents submitted to the CITY will be destroyed utilizing standard office practices, with the exception of the bid of the successful bidder. Should a non-successful bidder want its bid documents returned, it should include a self-addressed, postage-paid envelope with the bid, or request that the bid documents be saved in a self-addressed envelope included with the bid to be picked up at the Engineering Department upon the signature of the bidder.

SECTION 105 – ENGINEER

Where the word "ENGINEER" is used in the specifications or in the contract, it shall be and is mutually understood to refer to the CITY ENGINEER or an authorized representative of the CITY. The ENGINEER will give the grades and locations for all work, and no work depending upon such grades or locations shall be commenced until after the same have been established. Upon all questions concerning the interpretations of these specifications or the plans, the decision of the ENGINEER shall be binding upon both parties. Detailed plans of all work not completely shown on the plans now on file will be furnished by the ENGINEER from time to time, and the work shall be executed in accordance with such detailed plans.

SECTION 106 – CONTRACTOR

Where the word "CONTRACTOR" is used in the specifications or in the contract, it shall be and is mutually understood to refer to the party, firm, or corporation with whom the contract for the execution of the work is made, the agent of this party, or its legal representative. The Foreman of the CONTRACTOR in charge of the work will be held to represent the CONTRACTOR during the absence of the latter or CONTRACTOR's legal representative. Instructions given to the CONTRACTOR's Foreman on the work by the ENGINEER will be held as having been given to the CONTRACTOR.

SECTION 107 – CHARACTER OF WORKMEN

The CONTRACTOR shall remove from the project, when required to do so by the ENGINEER, any disorderly, dangerous, insubordinate, or incompetent person employed on the project. This person shall not return to the project without the written consent of the ENGINEER.

SECTION 108 – LOCAL CONDITIONS

Bidders shall satisfy themselves as to the nature of the material to be handled and the local site conditions affecting the work, and if conditions are found to be different than anticipated by the CONTRACTOR subsequent to the signing of the contract, it shall not in any way relieve the CONTRACTOR from its obligation or any risks from the fulfillment of all the work and terms of the contract.

SECTION 109 – METHODS AND APPLIANCES

The methods and appliances adopted by the CONTRACTOR shall be such as will enable the CONTRACTOR to secure a satisfactory quality of work and will enable the CONTRACTOR to complete the work within the time specified. The choice of methods and appliances to complete the work in compliance with the plans and specifications is solely the CONTRACTOR's. It is the responsibility and obligation to produce a complete project that fully complies with the plans and specifications and is of satisfactory quality. The ENGINEER may at any time inform the CONTRACTOR of apparent deficiencies in the work and the CONTRACTOR will make whatever adjustments are, in the CONTRACTOR's judgment, necessary to bring the work back into conformance. Failure of the ENGINEER to so advise the CONTRACTOR shall not in any way relieve the CONTRACTOR from its obligations which shall remain in full force and effect until the discharge of the contract. The Board of City Commissioners of the CITY OF BISMARCK reserves the right, in case of improper construction, to suspend the work at any time and to relet the work or to order the reconstruction of any part or all of the work improperly done.

SECTION 110 – DELAYS

The CONTRACTOR will not be entitled to any compensation for foreseeable or unforeseeable causes resulting in delays or hindrances to the work. Extensions of time will be granted for unavoidable delays, which in the opinion of the ENGINEER are clearly beyond the control of the CONTRACTOR including, but not restricted to, acts of God or of the public enemy, acts of the CITY, acts of another CONTRACTOR in the performance of a contract with the CITY, fires, epidemics, quarantine restrictions, strikes, freight embargoes, and abnormal and unforeseeable weather. The ENGINEER must receive a written request for time extension from the CONTRACTOR not more than twenty (20) days after commencement of delay before any time extension will be considered. Requests made beyond the twenty (20) day limit will be cause for denial. Any extension of time will not relieve the CONTRACTOR or its sureties from their obligations which shall remain in full force and effect until the satisfactory discharge of the contract.

SECTION 111 – DAMAGES

The CONTRACTOR will be held responsible and be required to make good, at CONTRACTOR's own expense, any and all damages to personal property caused by

carelessness, neglect, or want of due precaution on the part of the CONTRACTOR, its agents, employees, or workmen.

SECTION 112 - UTILITIES

It shall be the responsibility of the CONTRACTOR to be familiar with the location of the existing sewer and water mains and service lines, oil pipelines, gas mains and service lines, telephone and communication lines, power, light and telephone poles and guys, steam lines, valve boxes and stop boxes, mail boxes, and all appurtenances pertaining to utility and public services. The CONTRACTOR shall notify all underground facility operators at least forty-eight (48) hours in advance excluding Saturdays, Sunday, holidays, and in accordance with N.D. Century Code Chapter 49-23 of any construction and consult with personnel of said utility companies regarding any changes or conflicts. The CONTRACTOR is responsible for repairing or replacing any lawn irrigation systems damaged by the CONTRACTOR at no cost to the CITY.

SECTION 113 – CHANGES

The Board of City Commissioners reserves the right to make any changes in the alignment, grade, or design as may be deemed advisable, and should any changes so made put the CONTRACTOR to extra expense or operate to decrease CONTRACTOR's expense, the ENGINEER shall make due allowance, which action shall be binding upon both parties. The CONTRACTOR with whom the contract for the execution of the work is made will be required to make any extension which the Board of City Commissioners may require. The extensions shall be constructed at the same unit price for the same class of work as bid upon for this work, provided that should the prices of materials be increased or diminished over the prices of the same materials at the present time for the same class of work, the ENGINEER shall make due allowance. The action shall be binding upon both parties and provided further that such extensions shall be ordered prior to the completion of this contract.

SECTION 114 - QUANTITIES

The quantities shown on the plan sheet or supplemental specifications entitled "Approximate Quantities" are estimated quantities based on information available at the time of design. It is mutually understood that these quantities may change at the time of construction due to unforeseen conditions which may be encountered during construction. The Board of City Commissioners reserves the right to designate the order in which the work shall be done as well as the location and the amount of work to be completed. Payment shall be made for the final amount of work completed at unit prices specified in the contract.

SECTION 115 – SUBCONTRACTING

All work performed under this contract shall be by the company or firm to which the contract is awarded and no portion of the work shall be awarded to a subcontractor unless authorized in writing by the ENGINEER acting on the approval of the Board of

City Commissioners. The CONTRACTOR shall be responsible for the coordination and control of the subcontractor(s).

SECTION 116 – MONUMENTS, BENCH MARKS, WITNESS AND GRADE STAKES

All monuments, bench marks, witness and grade stakes are the property of the CITY, and in the event of the destruction or removal by the CONTRACTOR or any of CONTRACTOR's employees, such stakes shall be replaced by the ENGINEER at the CONTRACTOR's expense. Any interruption of work and/or costs incurred by the CONTRACTOR due to any delays caused during the replacement of destroyed monuments, bench marks, witness and grade stakes shall be borne by the CONTRACTOR. The CONTRACTOR shall be responsible for notifying the project observer a minimum of 72 hours prior to the expected survey.

SECTION 117 – PATENTS

The CONTRACTOR will be held responsible and be required to make good at CONTRACTOR's own expense any and all damages and suits for damages caused by infringements of the patent rights on devices or equipment for the requirements of this contract and is to indemnify and bear harmless the CITY OF BISMARCK from all claims, damages, or expenses by the use thereof. All fees and royalties covering the same are to be included in the price bid by the CONTRACTOR for the work to be done under the specifications.

SECTION 118 – ESTIMATES AND PAYMENTS

The ENGINEER shall make a monthly approximate measurement of the work done to date and an estimate of the value of the same at the prices agreed upon in the contract. When directed by the ENGINEER, the CONTRACTOR shall measure the work completed and submit to the ENGINEER in duplicate copy form an estimate of the work completed to date and value of same at the prices agreed upon in the contract.

The ENGINEER shall retain ten percent (10%) of the amount of each payment until fifty percent (50%) of all work in the Contract Documents has been completed and accepted by the ENGINEER. No further amount of retainage shall be withheld from payments after fifty percent (50%) of the contract has been completed unless the ENGINEER has on file any valid claims against the CONTRACTOR by the CITY OF BISMARCK or others. The ENGINEER may reduce the amount retained upon completion of ninety-five percent (95%) of all work in the Contract Documents and accepted by the ENGINEER. On completion and acceptance of a part of the work on which the price is stated separately in the Contract Documents, payment in full may be made, including retained percentages less authorized deductions.

Payment for materials in storage may be added to any monthly estimate. The CONTRACTOR must submit the materials invoices, and the materials must be stored on CITY lands or right-of-way, at the site, or as directed by the ENGINEER to be eligible for payment. All materials not in storage as directed by the CITY shall be deducted

from the material invoice. No retainage will be deducted for materials stored as directed by the CITY.

SECTION 119 – TIME OF BEGINNING AND COMPLETION OF WORK

The work on this contract shall be started on a date to be specified in the Advertisement for Bids or in a written order from the Board of City Commissioners and shall be completed on the date specified in the Advertisement for Bids. Work shall continue without interruption until the contract is completed except for weather conditions or at the discretion of the ENGINEER. The Board of City Commissioners reserves the right to determine in what order the work shall be done, and the work shall be executed in accordance with such directions.

SECTION 120 – CONTRACTOR'S RESPONSIBILITIES

Unless otherwise specified, the CONTRACTOR shall furnish all labor, materials, and equipment necessary for the completion of the Schedule of Work in accordance with the plans and specifications. The CONTRACTOR shall do all necessary hauling and perform all labor, incidental thereto, for which no express provisions have been made. The CONTRACTOR shall assume all risks or damages to persons or property prior to the final acceptance of the work. The CONTRACTOR shall so conduct its operation as not to interfere with the work of other contractors in the vicinity. The CONTRACTOR shall maintain at all times an efficiently sized crew headed by a competent construction foreman and the necessary skilled labor to efficiently complete the work.

The CONTRACTOR shall be responsible for maintenance and operation of all constructed facilities until final acceptance unless otherwise noted in specifications, notes, or special provisions. This includes locating of CONTRACTOR constructed underground facilities.

SECTION 121 – FINISHING AND CLEANUP

From time to time or as may be ordered by the ENGINEER and immediately after completion of the work, the CONTRACTOR shall at its own expense clean up and remove all refuse and unused materials of any kind resulting from the work. Upon failure to do so within twenty-four (24) hours after request by the ENGINEER, the work may be done by the CITY and the cost thereof charged to the CONTRACTOR and deducted from CONTRACTOR's final estimate. All excavated areas along trails, sidewalks, curbs, and other structures shall be backfilled with earth, and the cost of such work shall be incidental to the item of construction.

SECTION 122 – WARRANTY

The CONTRACTOR shall guarantee all work and materials and guarantee the performance of the finished project free from material defect or failure for a period of one (1) year from the date of final payment, and the performance bond shall remain in full force and effect for the period. The CONTRACTOR shall guarantee all concrete

items, such as curb and gutter, sidewalk, driveways, and valley gutters, within the right-of-way to perform as intended and to be free from material defect or failure for a period of two (2) years from the date of final payment, and the performance bond for these concrete items shall remain in full force and effect for the two-year period. The CONTRACTOR shall provide this warranty regardless of whether the cause of a failure is known or attributable to the CONTRACTOR except for damage caused by a third party by no fault of the CONTRACTOR.

SECTION 123 – LIQUIDATED DAMAGES

CITY and CONTRACTOR recognize that time is of the essence of the Agreement. They further recognize that not only will CITY suffer financial loss if the work is not completed within the times specified in the contract, plus any extensions thereof allowed pursuant to the terms of the contract, but also the public of the CITY OF BISMARCK will suffer damages extremely difficult to estimate. Thus the parties recognize the delays, expense, and difficulties involved in proving the actual loss and damages suffered by the CITY and by the public of the CITY OF BISMARCK if any of the work is not completed on time. The parties further recognize the CITY has made a reasonable endeavor to estimate the actual loss and damages which might be occasioned upon CITY and the public of the CITY OF BISMARCK in the event of delay of completion of any of the work and that CONTRACTOR was allowed input on this amount within five (5) days prior to the bid opening. Thus, both parties agree that the amounts of liquidated damages set forth herein to be assessed in the event of a delay in completion of any of the work are both reasonable in amount and reasonably related to the actual damages which the parties, through their reasonable endeavors, have estimated could occur upon delay in completion of any of the work. Accordingly, instead of requiring any actual proof of damages in the event that CONTRACTOR shall neglect, refuse, or fail to complete any work within the time specified in this contract, CITY and CONTRACTOR agree that as liquidated damages for delay (and not as a penalty) CONTRACTOR shall pay CITY the amount required in the schedule set forth in the project proposal, advertisement for bids, or special provisions for each day that expires after the time specified in the contract that any of the work is not complete unless extensions are allowed pursuant to the terms of the contract. Finally, CITY and CONTRACTOR specifically recognize that the recitals in this paragraph are conclusive presumptions, pursuant to section 31-11-02 of the North Dakota Century Code. The decision of the ENGINEER for the non-completion of the work shall be binding upon both parties. Liquidated damages shall be based on the schedule below unless otherwise adjusted based on circumstances of the project as stated in the advertisement or special provisions.

Contract Amount	Damages Per Calendar Year
$0.00 to $300,000.00	$200.00 per calendar day
$500,000.00 to $1,000,000.00	$500.00 per calendar day
$1,000,000.00 to $5,000,000.00	$1,000.00 per calendar day
Over $5,000.000.00	$2,000.00 per calendar day

SECTION 124 – TRAFFIC CONTROL DEVICES

The CONTRACTOR is assumed to be familiar with all federal, state, and local laws, codes, ordinances, and regulations which in any manner effect those engaged in the work or the materials or equipment used in or upon the site, or in any way affect the conduct of the work. No pleas of misunderstanding or ignorance on the part of the CONTRACTOR will, in any way serve to modify the provisions of the contract. The CONTRACTOR shall provide and maintain on a twenty-four (24) hour basis all necessary safeguards and traffic control devices at its own expense.

The CITY OF BISMARCK has adopted the U. S. Department of Transportation Manual on Uniform Traffic Control Devices, Part 6, 2009 Edition, or latest revision, for all traffic control devices and their placement. For all materials and equipment used for traffic control on all construction projects in the CITY OF BISMARCK, the CONTRACTOR shall comply with Section 704 of the Standard Specifications for Road and Bridge Construction and the Design Standard Drawings of the North Dakota Department of Transportation. The documents referred to above are available at the City of Bismarck Engineering Department.

When detours for roadway closures are not incorporated within the plans or are required because of an emergency situation, water main break, sewer collapse, etc., the CONTRACTOR shall submit a traffic control plan to the ENGINEER for review and approval.

SECTION 125 – TRANSPORTATION OF MATERIALS

The CONTRACTOR is authorized to ship all construction materials which are to be incorporated into the project to the CITY OF BISMARCK in care of the CONTRACTOR. Such materials are exempt from the Federal Tax on transportation of said materials. The exemption of Federal Tax does not apply to shipments of fuel, lubricants, spare parts, and items of construction equipment belonging to the CONTRACTOR and which will not be incorporated in the construction project and which will not become the property of the CITY OF BISMARCK. This authorization is granted with the distinct understanding that the CITY OF BISMARCK will receive all benefits from the exemption from payment of the tax. The tax is not included in the CONTRACTOR's bid and also all transportation charges shall be paid by the CONTRACTOR.

SECTION 126 – EXTRA WORK

The CONTRACTOR shall perform extra work for which there is no price in the contract whenever it is deemed necessary or desirable in order to complete fully the work as contemplated. If the CONTRACTOR contends that additional compensation is due for work or material not clearly covered in the contract, the CONTRACTOR shall promptly notify the ENGINEER in writing of the intention to file a claim and the basis for additional compensation before beginning or continuing construction on the affected work. If the basis for the claim does not become apparent until after proceeding with the work and it is not feasible to stop the work, the CONTRACTOR shall immediately notify the

ENGINEER that work is continuing and that written notification of the intent to file a claim will be submitted within ten (10) calendar days. The failure to give the required notification or to provide the ENGINEER proper facilities and assistance in keeping strict account of actual costs will constitute a waiver of the claim for additional compensation in connection with the work already performed. Notification of a claim, and the fact that the ENGINEER has kept account of the costs involved, shall not be construed as proving or substantiating the claim's validity. Such work shall be performed in accordance with the specifications. Work contained in the plans and specifications shall not be considered extra work and shall not be paid for by the CITY unless specifically agreed to in writing.

When work not shown on the plans is to be performed by the CONTRACTOR, the ENGINEER may order the work done on a force account basis when the measurement and payment becomes too cumbersome to be practicable, or when it is considered to be to the best interest of the CITY OF BISMARCK. Extra work will be paid for at the unit price or lump sum stipulated in the order authorizing the work, or the CITY OF BISMARCK may require the CONTRACTOR to do such work on a force account basis, to be compensated in the following manner:

(a) Labor. For all laborers (skilled & unskilled) and foremen in direct charge of the specific operations, the CONTRACTOR shall receive the rate of wage (or scale) agreed upon in writing before beginning work for each and every hour that said laborer and foreman are actually engaged in such work.

The wages of any foreman who is employed partly on the force account work and partly on other work will be prorated according to the number of workers in the two classes of work as shown by the payrolls.

The CONTRACTOR shall receive the actual costs paid to, or in behalf of, workmen by reason of subsistence and travel allowances, health and welfare benefits, pension fund benefits or other benefits, when such amounts are required by a collective bargaining agreement or other employment contracts generally applicable to the classes of labor employed on the work, but excepting any amounts which are already included in the wage rates paid. Any subsistence or travel allowance paid to the workmen shall be prorated according to the number of hours employed on the force account and other classes of work.

An amount equal to twenty percent (20%) of the sum of the above items will also be paid the CONTRACTOR.

(b) Bond, Insurance, and Tax. For premiums paid on additional bond, property damage, liability, and workmen's compensation insurance contributions, and social security taxes on the force account work, the CONTRACTOR shall receive the actual cost; to which cost six percent (6%) will be added. The CONTRACTOR shall furnish satisfactory evidence of the rate or rates paid for such bond, insurance, and tax.

(c) Materials. For materials accepted by the ENGINEER and used, the CONTRACTOR shall receive the actual costs of such materials delivered on the work including transportation charges paid by the CONTRACTOR (exclusive of machinery rentals as hereinafter set forth), to which cost fifteen percent (15%) will be added plus any sales tax paid by the CONTRACTOR. For all materials used in connection with but not entering permanently into the work, reasonable depreciation will be allowed.

(d) Equipment. For the use of authorized equipment and additional traffic control devices required by the Force Account work, the CONTRACTOR will receive rental rates determined in accordance with the then current issue of the North Dakota Department of Transportation (N.D.D.O.T.) publication entitled "Rental Rates for Equipment and Traffic Control Devices," which manual shall constitute a part of this specification. No percentage shall be added to these rates. No allowance will be allowed for equipment replacement or replacement escalators, cost of facilities capital, interest, small tools, or any other additives not listed. All equipment hours will be paid for as straight time. The only equipment payments that will be made are as follows:

(1) Owned Equipment. Payment for the actual hours of CONTRACTOR-owned equipment will be determined using the procedures outlined in the then current edition of the N.D.D.O.T. manual entitled "Rental Rates for Equipment and Traffic Control Devices."

The computed hourly equipment cost times the number of hours claimed shall not exceed the CONTRACTOR's actual purchase price for the piece of equipment being claimed.

Subcontractor-owned equipment will be paid for in the same manner as CONTRACTOR-owned equipment unless such equipment has been rented, leased, or hired by the CONTRACTOR, as provided for in (2) below.

(2) Leased, Rented, or Hired Equipment. Payment for leased, rented, or hired equipment shall be the actual invoice payment plus sales tax as verified by paid invoices signed by the lessor, or by checks issued by the CONTRACTOR. If the lease rental is weekly, the weekly rate shall be divided by 40 to get an hourly equipment cost for the claim. If the lease or rental is monthly, the monthly rate shall be divided by 176 to get an hourly equipment cost for the claim.

The computed hourly equipment cost, for each individual piece of equipment, times the number of hours claimed shall not exceed the CONTRACTOR's actual lease or rental cost for the time frame claimed.

(3) Idle Time. The number of hours of equipment use to be paid for will only be the hours that the equipment is operating on the claim item. No payment will be made for equipment on standby unless the standby is directed in writing by the ENGINEER, or the standby is proven to be as the direct result of the CITY's actions or inactions. Standby will be paid at 50 percent of the hourly bare rate

calculated by dividing the monthly rate by 176. The listed weekly, daily, or hourly rates will not be used. Operating costs will not be paid for hours of idle time.

Payment for standby time will not be made on any day the equipment operates for 8 or more hours. For equipment accumulating less than 8 hours operating time on any normal work day, standby payment will be limited to only that number of hours which, when added to the operating time for that day equals 8 hours. Standby payment will not be made in any case on days not normally a workday.

The above rental rates to be paid on equipment will be on the size normally used to operate the equipment, subject to approval of the ENGINEER. The above rental rates include gas, oil, repairs, and any other incidentals necessary for the operation of the equipment but do not include the operators. No work will be paid for until unit prices, rental rates, and wages have been agreed upon in writing.

Procedures governing rented or owner-operated equipment, attachments and accessories, types and quantity of equipment, measurement of equipment time, use of equipment in excess of fifty (50) hours per week, standby time, and equipment transportation charges will be as set forth in the N.D.D.O.T. rental rate publication.

(e) Miscellaneous. No additional allowance will be made for general superintendence, the use of small tools, or other costs for which no specific allowance is herein provided.

(f) Subcontracting. For any force account work performed by a subcontractor with the written authorization of the ENGINEER, the CONTRACTOR will receive an additional allowance for administrative and overhead expense. The additional allowance will be a percentage of the total force account invoice equal to ten percent (10%) of the first $3,000 plus three percent (3%) of the balance in excess of $3,000.

(g) Authority of Engineer. The ENGINEER has authority to require alterations in the equipment and labor force assigned to force account work, to limit authorization of overtime work to that normally used on the project for work of similar nature, or to require overtime when an emergency exists, and to require the cessation of force account work when adverse conditions severely limit productivity.

(h) Daily Records. The CONTRACTOR's representative and the ENGINEER shall compare records of the cost of work done as ordered on a force account basis at the end of each day for the purpose of resolving differences.

(i) Statements. No payment will be made for work performed on a force account basis until the CONTRACTOR has furnished the ENGINEER with duplicate itemized statements of the cost of such force account work detailed as follows:

1. Name, classification, date, daily hours, total hours, rate, and extension for each laborer and foreman.

2. Designation, dates, daily hours, total hours, rental rate, and extension for each unit of machinery and equipment.

3. Quantities of materials, prices, and extensions.

4. Transportation of materials.

5. Cost of property damage, liability and Workmen's Compensation Insurance premiums, Unemployment Insurance contributions, and Social Security Tax.

Statements shall be accompanied by receipted invoices for materials used including transportation charges paid by the CONTRACTOR. The statements shall be adjusted, when applicable, to reflect any discounts offered by the supplier. When materials used in the force account work are not specifically purchased for that work but are taken from the CONTRACTOR's stock, the CONTRACTOR shall furnish an affidavit certifying that such materials were taken from stock, that the quantity claimed was actually used, and that the price and transportation costs claimed are the CONTRACTOR's actual costs.

On or before the tenth (10th) day succeeding the completion of the extra work authorized by a "Work Order," the CONTRACTOR shall present to the ENGINEER the original "Work Order" together with a full and complete itemized statement of such extra work, with date of completion of the work mentioned therein. Upon certification by the ENGINEER or his authorized representatives as to the correctness of such items with regard to the amount and character of labor performed and materials furnished under such "Work Order," the ENGINEER shall enter the same as part of the estimate of the amount due the CONTRACTOR. The CONTRACTOR shall not be entitled to receive payment for any extra work in which he fails to present the "Work Order" within the time and in the manner hereinbefore mentioned.

The additional payment based on the percentages specified above shall constitute full compensation for all items of expense not specifically provided for the force account work. The total payment made as provided above shall constitute full compensation for such work.

SECTION 127 – FINAL PAYMENT

After the work has been completed, the ENGINEER will prepare a final statement showing the quantities of each and every item of work performed by the CONTRACTOR. All estimates upon which previous payments have been based are partial estimates and are subject to correction in the final statement. The final statement showing the entire quantity and value of each and every item of work performed will be submitted to the CONTRACTOR for its approval before being processed by the CITY for payment.

(a) Overpayment. If the final statement shows that the total of all partial payments made exceeds the total amount due to the CONTRACTOR, the CONTRACTOR shall promptly refund to the CITY the amount of such overpayment. If such refund is not

made, the CITY shall have the right to deduct the amount thereof from any moneys due to the same CONTRACTOR under any other contract, either present or future.

SECTION 128 – CONTRACTOR'S INSURANCE

The CONTRACTOR shall not commence work under this contract until a "Certificate of Insurance" has been obtained and submitted to the CITY for all insurance required under this paragraph and proof of such insurance has been delivered to the CITY nor shall the CONTRACTOR allow any subcontractor to commence on any subcontract until all similar insurance required of the subcontractor has been obtained and proof has been delivered to the CITY.

(a) Compensation Insurance. The CONTRACTOR shall take out and maintain during the life of this contract Workers Compensation Insurance for all of CONTRACTOR's employees employed at the site of the project. In case any work is sublet, the CONTRACTOR shall require the subcontractor similarly to provide Workers Compensation Insurance for all of the latter's employed unless such employees are covered by the protection afforded by the CONTRACTOR. In the case of employees engaged in hazardous work under this contract, at the site of the project, who are not protected under the Workers Compensation Statute, the CONTRACTOR shall provide and shall cause each subcontractor to provide Employer's Liability Insurance for the protection of its employees not otherwise protected.

(b) Public Liability and Property Damage Insurance. The CONTRACTOR shall take out and maintain during the life of the Contract such Public Liability and Property Damage Insurance as shall protect him, the CITY, and any subcontractor performing work covered by this contract, for claims and damages for personal injury including accidental death and including the coverage for "Assault and Battery" as well as from claims for property damage (including damage to CITY's Property), which may arise from operations under this contract, whether such operations by himself or any subcontractor or by anyone directly employed by either of them to, from, or on the site and the amounts of such insurance shall be as follows:

Public Liability Insurance in an amount not less than $1,000,000.00 for personal injuries, etc., including accidental death to any person, in an amount not less than $2,000,000.00 on account of one accident and Property Damage Insurance not less than $1,000,000.00. Where excavation, trenching, or tunneling is involved, the Property Damage Liability Coverage under the Comprehensive General Liability Policy shall specifically provide coverage for damage to underground property. The CITY OF BISMARCK shall be named as an additional insured on all the policies required under this section.

(c) Satisfactory Coverage. In the event that the form of any policy or certificates or the amount of the insurance or the companies writing same are not satisfactory to the CITY, the CONTRACTOR shall obtain new policies or certificates in compliance with these specifications. The CONTRACTOR shall not cause any policies to be canceled or to permit them to lapse, and all insurance policies shall include a clause to the effect

that the policy shall not be canceled or changed until thirty (30) days after the CITY has received written notice as evidenced by the return receipt of the registered letter.

(d) Proof of Insurance. "Certificates of Insurance" shall contain true transcripts from the policy, authenticated by the proper officer of the insurer, evidencing in particular those insured, the extent of the insurance, the locations and operations to which the insurance applies, the effective date and expiration date and the notice of cancellation clause mentioned herein above.

(e) Builder's Risk Insurance. The CONTRACTOR will maintain Builder's Risk Insurance or like insurance coverage (fire and extended coverage) on a one-hundred percent (100%) completed value basis on the insurable portion of the project for the benefit of the CITY, the CONTRACTOR, and all subcontractors, as their interest may appear.

SECTION 129 – OBSERVATION AND TESTING

All materials and equipment used in the construction of the Project shall be subject to adequate observation and testing in accordance with generally accepted standards.

The CONTRACTOR shall provide at its expense the necessary testing and inspection services required by the plans and specifications unless otherwise provided.

If the Plans and Specifications, laws, ordinances, rules, regulations, or orders of any public authority having jurisdiction require any work to specifically be inspected, tested, or approved by someone other than the CONTRACTOR, the CONTRACTOR will give the ENGINEER timely notice of readiness. The CONTRACTOR will then furnish the ENGINEER the required certificates of inspection, testing, or approval.

Neither observations by the ENGINEER nor inspections, tests, or approvals by persons other than the CONTRACTOR shall relieve the CONTRACTOR from its obligations to perform the work in accordance with the requirements of the Plans and Specifications.

The ENGINEER and the representative of ENGINEER will at all times have access to the work. In addition, authorized representatives and agents of any participating federal or state agency shall be permitted to inspect or observe all work, materials, payrolls, records of personnel, invoices of materials, and other relevant data and records. The CONTRACTOR will provide facilities for such access and observation of the work and also for any inspection or testing thereof.

If any work is covered contrary to the request of the ENGINEER, it must at the ENGINEER's request, be uncovered for ENGINEER's observation and replaced at the CONTRACTOR's expense.

If any work has been covered which the ENGINEER has not specifically requested to observe prior to its being covered, or if the ENGINEER considers it necessary or advisable that covered work be inspected or tested by others, the CONTRACTOR at the

ENGINEER's request will uncover, expose, or otherwise make available for observation, inspection, or testing as the ENGINEER may require, that portion of the work in question, furnishing all necessary labor, materials, tools, and equipment. If it is found that such work is defective, the CONTRACTOR will bear all the expenses of such uncovering, exposure, observation, inspection, and testing and of satisfactory reconstruction. If, however, such work is not found to be defective, the work will be under Section 126, Extra Work or an extension of the Contract Time or both directly attribute to such uncovering, exposure, observation, inspection, testing, and reconstruction and an appropriate work order shall be issued.

SECTION 130 – INDEMNITY AGREEMENT FOR CONTRACTORS

The CONTRACTOR agrees to indemnify and save harmless the CITY OF BISMARCK, its appointed and elective officers and employees, from and against any and all loss or expense, including attorney's fees and costs by reason of liability imposed by law upon the CITY, its elected or appointed officials or employees for damages because of bodily injury including death at any time resulting therefrom sustained by any person or persons and on account of damage to property including loss of use thereof, arising out of or in consequence of the performance of this work, whether such injuries to persons or damage to property is due to the negligence of the CONTRACTOR, its agents or employees, its subcontractors, their employees, CITY OF BISMARCK, its appointed or elected officers, employees, or their agents, except only such injury or damage as shall have been occasioned by the sole negligence of the CITY, its appointed or elected officials or employees.

SECTION 131 – CONFORMITY WITH PLANS & SPECIFICATIONS

Unless specific tolerances are specified, all work performed and all materials furnished shall be in reasonably close conformity with the lines, grades, cross sections, dimensions, and material requirements, shown on the plans or indicated in the specifications.

Plan dimensions and contract specification values are to be considered as the target value to be strived for as the design value from which any deviations are allowed. It is the intent of the specifications that the materials and workmanship shall be uniform in character and shall conform as nearly as realistically possible to the prescribed target value or to the middle portion of the tolerance range. The purpose of the tolerance range is to accommodate occasional minor variations from the median zone that are unavoidable for practical reasons. When a maximum or minimum value is specified, the production and processing of the material and the performance of the work shall be so controlled that the material or work will not be preponderantly of borderline quality or dimension.

In the event the ENGINEER finds the materials or the finished product in which the materials are used are not within reasonably close conformity with the plans and specifications but that reasonably acceptable work has been produced, the ENGINEER will then make a determination if the work will be accepted and remain in place. In this

event, the ENGINEER will document the basis of acceptance by contract modification which will provide for an appropriate adjustment in the contract price for such work or materials as the ENGINEER deems necessary to conform to a determination based upon engineering judgment.

In the event the ENGINEER finds the materials or the finished product in which the materials are used or the work performed are not in reasonably close conformity with the plans and specifications and have resulted in an inferior or unsatisfactory product, the work or materials shall be removed and replaced or otherwise corrected by and at the expense of the CONTRACTOR.

SECTION 132 – SEVERAL CONTRACTS ON SAME SITE

When different types of construction work on the same section of public right-of-way or site are let under separate contracts, the several CONTRACTORS shall cooperate to the fullest extent with each other so that the prosecution of the work under each contract will be carried out for the best interests of the CITY. The CITY assumes no liability for any delay caused by any CONTRACTOR, its subcontractor(s) or supplier(s) to any other CONTRACTOR, its subcontractor(s) or supplier(s).

SECTION 133 – PROTECTION OF TREES

A CONTRACTOR working on public rights-of-ways or properties shall be responsible for the prevention of damage to trees, shrubs, bushes, hedges, or other woody plants located within or infringing on the public rights-of-ways and properties, including parks, and shall notify the City Forestry Department prior to beginning any construction near said trees.

The CONTRACTOR shall construct a fence or frame, not less than four (4) feet high, around the tree canopy (drip line) capable of preventing soil, building material, or debris from accumulating about the base of the plant which shall also be capable of serving as a barrier to all construction or public traffic. Materials or debris shall not be stored above the root zone of any tree which may impede the free passage of air, water, or nutrients except by written permission of the City Forester.

The CONTRACTOR shall exercise care in driving or working on the root zone area of trees to prevent excessive compaction of the soil. Gaseous, liquid, or solid substances which are harmful to plantings shall not come into contact with any plantings. Nails, bolts, or other fastening materials shall not be imbedded into the trunk or limbs of a tree. Ropes, wires, or other hanging materials shall not be attached to a plant in such a manner that the bark may be damaged or cause undue stress to the plant structure.

Any overhanging branches or underlying roots which may be crushed, scarred, broken, or damaged in any way due to unavoidable construction activity shall be reported to the City Forester so that preventive action may be taken to minimize damage to plants. Any trees damaged without prior notification of City Forester shall be the responsibility of the

CONTRACTOR to repair or replace using a licensed tree service, upon determination by the City Forester.

If it is determined by the City Forester that ditches, tunnels, trenches, or other earthmoving operations for underground utilities construction will cause damage to the health, vigor, and stability of plants, the City Forester may require that power drive soil augers or the power push method be used wherever possible. Where this is not possible, the City Forester must be notified to assist in determining alternate methods. If trees must be pruned, fertilized, or removed prior to construction, as determined by the City Forester, all costs using prescribed methods shall be the responsibility of the CONTRACTOR. CONTRACTOR shall become familiar with and adhere to the Forestry Department's Standard Specifications on trenching and augering around trees.

Prior to backfilling any trench or ditch, the City Forester shall be notified to inspect any repairs made to damaged roots. All exposed roots shall be pruned or trimmed using a hand pruner or hand saw. Axe cuts will not be allowed.

Upon completion of construction, the CONTRACTOR shall notify the City Forester for a final inspection of the trees whether or not any damage occurred. Any damage found to have been the construction activity of the CONTRACTOR shall be the remedial responsibility of the CONTRACTOR to be corrected by a licensed tree service.

SECTION 134 – DEBARMENT CERTIFICATION

As required by Bismarck City Ordinance, all suppliers, contractors, and service providers doing business with the CITY must certify that they are in compliance with all federal, state, and local laws, regulations, and orders including, but not limited to, those regarding non-discrimination, wages and hours, workers compensation, and immigration. Failure of compliance may result in the cancellation of any CITY contract and exclusion from consideration for future contracts.

By submission of a bid or proposal, the bidder or proposer certifies, to the best of its knowledge and belief, that it and its principals:

(a) Are not presently debarred, suspended, proposed for debarment, declared ineligible, or voluntarily excluded from covered transactions by any federal department or agency;

(b) Have not, within a three (3) year period preceding this certification, been convicted of or had a civil judgment rendered against them for commission of fraud or a criminal offense including, but not limited to, a violation of federal or state antitrust statutes, or commission of embezzlement, theft, forgery, bribery, falsification or destruction of records, making false statements, immigration violations, or receiving stolen property in connection with obtaining, attempting to obtain, or performing a public (federal, state, or local) contract;

(c) Are not presently indicted for or otherwise criminally or civilly charge by a governmental entity (federal, state, or local) with commission of any of the offenses listed in subparagraph (b) of this certification; and

(d) Have not within a three-year period preceding this certification had one or more public contracts (federal, state, or local) terminated for cause or default.

The bidder or proposer also certifies that, if it later becomes aware of any information contradicting the statements above, it will provide that information to the CITY.

If the bidder or proposer is unable to certify to all statements in this certification, it shall indicate so in its bid or proposal, or in a transmittal letter or message accompanying its bid or proposal and provide a written explanation to the CITY.

SECTION 135 - SHOP DRAWINGS

Before any of the materials are delivered to the job, the CONTRACTOR shall submit to the CITY ENGINEER complete Shop Drawings.

The Shop Drawings shall include catalog numbers, performance data, dimensions, and other descriptive information.

The Shop Drawings may be in the form of printed catalog sheets showing all necessary information and shall be BOUND TOGETHER, NEATLY INDEXED AND TABBED.

Each Shop Drawing folder or set of drawings shall be STAMPED, INITIALED, AND DATED by CONTRACTOR to indicate they have thoroughly reviewed them.

The CITY review of Shop Drawings is for general compliance with contract documents. The CITY review does not relieve the CONTRACTOR from responsibility for errors, omissions, or deviations from contractor requirements.

Shop Drawings not in conformance with the Specifications may be returned to CONTRACTOR without review.

The CITY ENGINEER will retain two copies after review, and the balance will be returned to CONTRACTOR.

SECTION 136 - EROSION CONTROL AND TRACKING

The CONTRACTOR shall be responsible to prevent soils or loose materials such as chips, millings, etc. from entering ditches, streets, gutters, or inlets. Any soils, loose materials, tracking, or sedimentation shall be removed and disposed of on a regular basis.

SECTION 137 - CITY CONDUCTOR DAMAGE

Any cost to locate damages to CITY electrical conductors or any other components of the CITY lighting, traffic signal, or other systems will be billed to the CONTRACTOR. The CITY OF BISMARCK will bill at the current CITY rates for labor, equipment, and materials as needed. If there are any questions, contact the City of Bismarck Public Works office at 701-355-1700.

Before any repairs are made, the damage shall be inspected by a CITY street light or traffic signal technician to determine the extent of the damage which will dictate the necessary repair.

If damage causes more than two (2) splice repairs to roadway lighting conductors in a direct buried run between poles or to junction box, the entire conductor run shall be replaced. Splices are not allowed on traffic signal conductors including direct bury power supply.

If damage occurs to a conductor run contained in a conduit which would require a conductor splice to repair, the entire conductor run shall be replaced and the conduit must be repaired.

If a damage occurs to conductors which were not located, or if due care is not exercised in exposing conductors, then the entire conductor run shall be replaced.

Damaged conductors shall be replaced or repaired within 24 hours of discovery or the CITY will cause the repairs to be made and bill the CONTRACTOR. Any underground repairs shall be made in accordance with Section 1001-2.12 Underground Splices.

Prior to covering up any repairs, the CITY shall be notified to inspect the repair. Once repairs are accepted, the site shall be restored.

SECTION 138 - REQUEST FOR ALTERNATE SPECIFICATIONS

The reference to manufacturer's name and catalog or model numbers shall be interpreted as establishing a standard of quality, not as limiting competition.

CONTRACTORS wishing to price material or equipment not referenced in specifications or on drawings shall apply in writing to the CITY ENGINEER to have the material or equipment recognized as an approved equal. The CONTRACTOR must include complete descriptive technical data on the proposed item consisting of: model numbers, type, size, and performance characteristics. Procedure also applies to requests by suppliers. A self-addressed, stamped envelope is required for a return reply.

The request for consideration of an approved equal must be received in the CITY ENGINEER's office no later than 240 hours (ten days) prior to bid opening. All approved equals approved for bid may be listed in addenda sent to all plan holders in advance of bid opening.

CONTRACTORS choosing to use material or equipment other than those shown on drawings or specified in detail, but approved for bid, shall be responsible for physical dimensions and coordination. The CITY OF BISMARCK will not be responsible for costs of necessary changes and additional work required by the CONTRACTOR or any other trades arising from such use.

If the alternate is deemed unacceptable to the ENGINEER, the bidder may request, in writing, that the matter be scheduled for consideration by the Board of City Commissioners. Such request must be made to the City Administrator no later than 168 hours (seven days) prior to the Board of City Commission meeting set for the award date. Requests for consideration by the Board of City Commissioners after that date shall not be honored.

SECTION 139 - STREET SIGN REMOVE AND REINSTALL

Any existing and permanent signs shall be removed and reinstalled by the CITY OF BISMARCK. The CONTRACTOR shall give the ENGINEER a three (3) working day notice to schedule the removal at the time needed. The CONTRACTOR shall be assessed $300.00 per sign for signs removed with the ENGINEER's approval.

SECTION 200

EARTHWORK

SECTION 201 - CLEARING AND GRUBBING

201-1 DESCRIPTION

This item shall consist of clearing or clearing and grubbing, including the disposal of materials, for all areas within the limits designated on the plans or as required by the ENGINEER.

Clearing shall consist of the cutting and removal of all trees, stumps, brush, and hedges, as well as the removal of fences and other loose or projecting material from the designated areas. The grubbing of stumps and roots will not be required under clearing. Clearing, when so designated, shall consist of the cutting and removal of isolated single trees or isolated groups of trees. The cutting of all the trees of this classification shall be in accordance with the requirements for the particular area being cleared or as shown on the plans or as directed by the ENGINEER.

Clearing and grubbing shall consist of clearing the surface of the ground of the designated areas of all trees, stumps, down timber, logs, snags, brush, undergrowth, hedges, heavy growth of grass or weeds, fences, structures, debris, rubbish of any nature, natural obstructions, or such material which in the opinion of the ENGINEER is unsuitable for the foundation of pavements or other required structures. This shall also include the grubbing of stumps, roots, and foundations and the disposal from the project of all spoil materials resulting from clearing and grubbing.

201-2 CONSTRUCTION REQUIREMENTS

201-2.1 GENERAL. The areas denoted on the plans to be cleared and grubbed under this item shall be staked on the ground by the ENGINEER. The clearing and grubbing shall be done at a satisfactory distance in advance of the grading operations.

All spoil materials removed by the clearing or by clearing and grubbing shall be disposed at an approved disposal area.

As far as practicable waste concrete and masonry shall be placed on slopes of embankments or channels. When embankments are constructed of such material, this material shall be placed in accordance with requirements for formation of embankments. Any broken concrete or masonry which cannot be used in construction, and all other materials not considered suitable for use elsewhere, shall be disposed of by the CONTRACTOR. In no case shall any discarded materials be left in windrows or piles adjacent to or within the work or project limits. The manner and location of disposal of materials shall be subject to the approval of the ENGINEER and shall not create an unsightly or objectionable view.

Any blasting necessary shall be done at the CONTRACTOR's responsibility. The utmost care shall be taken not to endanger life or property.

The removal of existing structures and utilities required to permit orderly progress of work shall be accomplished by local agencies, unless otherwise shown on the plans. Whenever a utility pole, pipeline, conduit, cable, sewer, roadway, or other utility is encountered and must be removed or relocated, the CONTRACTOR shall advise the ENGINEER who will notify the proper authority or Owner and attempt to secure prompt action.

201-2.2 CLEARING. The CONTRACTOR shall clear the staked or indicated area of all objectionable materials. Trees unavoidably falling outside the specified limits must be cut up, removed, and disposed of in a satisfactory manner. In order to minimize damage to trees that are to be left standing, trees shall be felled toward the center of the area being cleared. The CONTRACTOR shall preserve and protect from injury all trees not to be removed. The trees, stumps, and brush shall be cut to a height of not more than 12 inches above the ground. The grubbing of stumps and roots will not be required.

Fences shall be removed and disposed of or salvaged as directed by the ENGINEER.

All tree removal shall be done utilizing a contractor licensed with the City of Bismarck's Forestry Department.

201-2.3 CLEARING AND GRUBBING. In areas designated to be cleared and grubbed, all stumps, roots, buried logs, brush, grass, and other unsatisfactory materials shall be removed except where embankments exceeding 3 1/2 feet in depth are to be made outside of paved areas. In cases where such depths of embankments are to be made, all unsatisfactory materials shall be removed, but sound trees, stumps, and brush can be cut off within 6 inches above the ground and allowed to remain. Roots and other projections over 1 1/2 inches in diameter shall be grubbed out to a depth of at least 18 inches below the finished subgrade or slope elevation.

When isolated trees are designated for clearing, the trees shall be classed in accordance with the diameter size as measured at point 54 inches above the ground level or at a designated height specified in the proposal.

Any buildings and miscellaneous structures that are shown on the plans to be removed shall be demolished or removed, and all materials therefrom shall be removed from the site. The remaining foundations, wells, cesspools, and all like structures shall be destroyed by breaking out or breaking down the materials of which the foundations, wells, cesspools, etc., are built and removing the footing and walls or as specified on the plans. Any broken concrete, blocks, or other objectionable material which cannot be used in backfill shall be removed and disposed of by the CONTRACTOR. The holes or openings shall be backfilled with acceptable material and properly compacted.

All holes remaining after the grubbing operation in embankment areas shall have the sides broken down to flatten out the slopes and shall be filled with acceptable material, dried or moistened, and properly compacted in layers to the density required in Subsection 202-3.7. The same construction procedure shall be applied to all holes remaining after grubbing in excavation areas where the depth of holes exceeds the depth of the proposed excavation.

All tree removal done within clearing and grubbing shall be done utilizing a contractor licensed with the City of Bismarck's Forestry Department.

201-2.4 TREE ROOT CUTTING. The CONTRACTOR shall be responsible for the prevention of damage to trees, shrubs, bushes, and hedges.

When tree roots are found larger than 3 inches in diameter during construction, the CONTRACTOR must contact the City of Bismarck's Forestry Department to determine if such roots shall be cut and/or if the tree shall be removed before continuing any further construction.

When the City Forester determines that the roots may be cut, all roots shall be cut cleanly to avoid jagged rough ends. A visual inspection of tree root cuts shall be made by the City Forester.

All roots greater than 3 inches in diameter shall be cut using a hand pruner, hand saw, power saw, or stump grinder.

201-3 MEASUREMENT AND PAYMENT

201-3.1 CLEARING. Clearing shall be measured by the square yard (SY) or considered a lump sum and shall be paid for at the unit price bid for "Clearing" completed and approved by the ENGINEER.

201-3.2 CLEARING AND GRUBBING. Clearing and Grubbing shall be measured by the square yard (SY) or considered a lump sum and shall be paid for at the unit price bid for "Clearing and Grubbing" completed and approved by the ENGINEER.

201-3.3 TREE REMOVAL. When the proposal indicates measurement by individual unit basis, the accepted quantities of "Tree Removal" shall be measured and paid for at the unit price bid for the following item:

Pay Item	Unit
Trees (0" to 2")	Incidental to other items
Trees (2" to 6")	Each
Trees (7" to 12")	Each
Trees (13" to 24")	Each
Trees (over 24")	Each

Tree sizes shall be determined by measuring the diameter at a point 54 inches above the ground.

201-3.4 TREE ROOT CUTTING. Tree root cutting shall be measured on an individual basis for each root cut (Ea.) and accepted by the ENGINEER. There shall be no payment of tree root cuttings less than 3 inches in diameter. Tree root cutting shall be paid for at the unit price for "Tree Root Cutting" completed and approved by the City Forester.

201-3.5 BUILDING REMOVAL. Building removal shall be measured by the individual unit basis (Ea.) and paid for at the unit price bid for "Building Removal" including the foundation complete and approved by the ENGINEER.

201-3.6 FOUNDATION REMOVAL. Foundation Removal shall be measured by the individual unit basis (Ea.) and paid for at the unit price bid for "Foundation Removal" complete and approved by the ENGINEER.

SECTION 202 - EXCAVATION AND EMBANKMENT

202-1 DESCRIPTION

This item shall consist of excavating, removing, and satisfactorily disposing of all materials within the limits of the work in accordance with these specifications and in conformity with the dimensions and typical sections shown on the plans and with the lines and grades established by the ENGINEER.

"Unstable," "Suitable," "Unsuitable," and "Unsatisfactory" soil or aggregate items shall be defined as follows:

a. UNSTABLE SOILS

Unstable soils are those soils which in their natural or existing condition require manipulation, aeration, or wetting and recompaction to obtain the required density for a suitable subgrade foundation. This condition is usually caused by too high a moisture content for cohesive soils and too loose and/or dry for granular soils.

In the case of cohesive soils where in their natural state the moisture content exceeds optimum moisture, they begin to behave as plastic rather than solid. Scarifying or windrowing to a depth of 9 to 12 inches and recompacting the soil in 6-inch lifts to prescribed density requirements will usually correct this condition. The other alternative is to subcut to prescribed depth and replace the cohesive material in accordance with specifications.

In the case of granular soils that are too loose, usually subcutting those and replacing them in 6-inch lifts to prescribed density soil will correct this condition.

In either case, it is not that these soils have to be replaced with more desirable soil, it is merely that in their natural state they are unstable but not unsuitable for subgrade foundation.

b. UNSUITABLE SOILS

Unsuitable soils are those soils which in their natural state are unsuitable for subgrade foundation due to a high organic content such as vegetation, matted roots, peat, or muck. Soils of these types are very susceptible to consolidation due to the decaying of this organic matter. Other unsuitable soils are those which contain decomposable debris and ashes.

The frozen condition of any soil or material shall not constitute a basis for a change of classification. Although frozen material shall not be allowed in the trench unless otherwise indicated, it shall be recompacted after it has thawed as directed by the ENGINEER.

c. SUITABLE MATERIALS

Suitable materials are those materials which have been determined to be satisfactory for subgrade foundations and includes all stable or unstable soils and any other materials deemed satisfactory by the ENGINEER for use in subgrades or embankments.

d. UNSATISFACTORY MATERIALS

Unsatisfactory materials are those materials which have been determined to be unsuitable for subgrade foundations and includes all unsuitable soils, rock, shale hardpan, loose rock, boulders, concrete chunks or slabs, debris, and any other materials deemed unsatisfactory by the ENGINEER for use in subgrades or embankments.

All suitable material taken from excavation shall be used in the formation of embankment, subgrade, and for backfilling as indicated on the plans or as directed by the ENGINEER.

When the volume of the excavation exceeds that required to construct the embankments to the grades indicated, the excess shall be used to grade the areas of ultimate development or wasted as directed. When the volume of excavation is not sufficient for constructing the fill to the grades indicated by the ENGINEER at locations designated on the plans, or the Special Provisions, the additional material required shall be identified by the ENGINEER and paid as “Borrow Excavation.”

202-2 CLASSIFICATION

All material excavated shall be defined as "Unclassified Excavation" unless, in the proposal form, prices are asked and bids are taken for "Rock Excavation" and "Borrow Excavation."

"Unclassified Excavation" shall include all excavation performed under this item regardless of the material encountered.

"Rock Excavation," when provided in the proposal, shall include all solid rock in ledges, in bedded deposits, in unstratified masses, and conglomerate deposits which are so firmly cemented they present all the characteristics of solid rock and which cannot be removed without drilling and blasting. All rock not allowed to be placed in the backfill or embankment, as directed by the ENGINEER, shall be considered “Rock Excavation.”

"Borrow Excavation" shall consist of approved material required for the construction of embankments or for other portion of the work and shall be obtained from approved sources. Unless otherwise designated in the contract, the CONTRACTOR shall pay all costs involved.

The CONTRACTOR shall notify the ENGINEER in advance of opening any borrow areas so that the borrow material can be tested before being used. Sufficient time for testing the borrow shall be allowed.

202-3 CONSTRUCTION REQUIREMENTS

202-3.1 GENERAL. The rough excavation shall be carried to the necessary depth to obtain the specific depth of subgrade compaction shown on the plans. Likewise, on embankments the depth of subgrade compaction shall be as shown on the plans. Should the CONTRACTOR through negligence or other fault excavate below the designated lines, the excavation shall be replaced with approved materials in an approved manner and condition at the CONTRACTOR's own expense.

The ENGINEER shall have complete control over the excavation, moving, placing, and disposition of all material and shall determine the suitability of material to be placed in embankments. All material determined unsuitable shall be disposed of in waste areas or as directed. Topsoil shall not be used in fills or in subgrades but shall be handled and placed as directed.

The CONTRACTOR shall inform and satisfy himself as to the character, quantity, and distribution of all materials to be excavated. No payment will be made for any excavated material which is used for purposes other than those designated. All spoil areas shall be leveled to a uniform line and section and shall present a neat appearance before project acceptance. The surface elevation of spoil areas shall not extend above the surface elevation of adjacent or contiguous usable areas unless approved by the ENGINEER.

The area between the roadway right-of-way to the future curb and gutter shall be graded to the top of future curb elevation. The remaining area shall be graded to the future gutter elevation. See Standard Detail 200-1.

The ENGINEER shall provide centerline stakes to prepare the grading. The CONTRACTOR shall be responsible for staking all other grades necessary to complete grading as per plans or specifications.

The ENGINEER shall verify that finished grading for roadway is within one (1) inch of the final subgrade elevation specified. If grading does not meet tolerance, the CONTRACTOR shall be responsible for regrading to meet tolerance.

Those areas outside of the pavement areas in which the top layer of soil material becomes compacted due to hauling or to any other activity of the CONTRACTOR, shall be scarified and disked to a depth of 4 inches, as directed, to loosen and pulverize the soil.

If it is necessary to interrupt existing surface drainage, sewers, or underdrainage, conduits, utilities, or similar underground structures, or parts thereof, the CONTRACTOR shall be responsible for and shall take all necessary precautions to

protect and preserve or provide temporary services. When such facilities are encountered, the CONTRACTOR shall notify the ENGINEER, who shall arrange for their removal, if necessary. The CONTRACTOR shall assume all costs to repair all damage to such facilities or structures which may result from operations of the CONTRACTOR during the period of the contract.

The CONTRACTOR shall engage an independent soils testing laboratory approved by the ENGINEER to determine the soil proctors and perform the required compaction testing to be determined by the ENGINEER.

The compaction control tests for this section are based on one individual compaction test per 200 cubic yards of fill and 750 square yards of area. The CONTRACTOR shall be responsible for all retesting of failed tests and a proctor determined to represent each soil condition to be encountered on the project. The time, locations, depths, and frequency of compaction testing shall be at the discretion of the ENGINEER during construction. Should it become necessary to conduct an additional number of initial compaction tests, over and above the number specified for bidding purposes, the CITY OF BISMARCK shall be responsible for all costs associated with additional testing performed by an independent soils testing laboratory. The CONTRACTOR, however, will be required to assume the cost of all retesting of failed tests, regardless of the total number required during construction.

Compaction testing to determine densities may be accomplished with a nuclear density testing apparatus and/or the sand cone method. Should disputes arise concerning test results, they will be resolved by using only the sand cone method of testing.

Written reports of all test results shall be supplied to the ENGINEER and the CONTRACTOR by the testing laboratory as soon as possible. To expedite construction progress it is necessary that the CONTRACTOR and ENGINEER be furnished with the results of all tests as soon as testing is completed. The availability of the independent testing laboratory when needed and speed of testing and reporting are to be considered the responsibility of the CONTRACTOR.

Compaction Control Test as stated above shall be incidental to the price bid for 202-4.1 Unclassified Excavation and/or 202-4.3 Borrow Excavation.

202-3.2 EXCAVATION. Excavation shall be performed as indicated on the contract plans to the lines, grades, and elevation shown or as directed by the ENGINEER, and shall be made so that the requirements for formation of embankments can be followed. No excavation or stripping shall be started until the ENGINEER has taken cross-sectional elevations and measurements of the existing ground surface and has staked out the proposed work. All material encountered within the limits indicated shall be removed and disposed of as directed. During the process of excavation, the grade shall be maintained so that it will be well drained at all times. When directed, temporary drains and drainage ditches shall be installed to intercept or divert surface water which may affect the work.

If, at the time of excavation, it is not possible to place any material in its proper section of the permanent construction, it shall be stockpiled in approved areas for later use.

Rock, shale, hardpan, loose rock, boulders, or other material unsatisfactory for subgrades, streets, roads, shoulders, intermediate areas, or any areas intended for turfing shall be excavated to a minimum depth of 12 inches, or to the depth specified by the ENGINEER, below the contemplated surface of the subgrade or the designated grades. Muck, peat, matted roots, or other yielding material, unsatisfactory for subgrade foundation, shall be removed to the depth specified to provide a satisfactory foundation. Unsatisfactory materials shall be disposed of at locations designated by the ENGINEER. All material so excavated shall be paid for at the contract unit price per cubic yard for "Unclassified Excavation" or for "Rock Excavation," as the case may be, when the classification for the last two items is provided in the proposal. The portion so excavated shall be refilled with suitable selected material as specified, obtained from the grading operations or borrow area and thoroughly compacted by rolling. The necessary refilling will constitute a part of the embankment. Where rock cuts are made and refilled with selected material or where trenching out is done to provide for a course of pavement, the depths thus created shall be ditched at frequent intervals to provide drainage.

The CONTRACTOR shall make the distribution as indicated on the plans. Widening or narrowing of the section and raising or lowering of the grade to avoid haul will not be permitted. The ENGINEER reserves the right to make minor adjustments or revisions in lines or grades, if found necessary, as the work progresses due to discrepancies in the plans or to obtain satisfactory construction.

Overbreak, including slides, is that portion of any material displaced or loosened beyond the finished work as planned or authorized by the ENGINEER. The ENGINEER, whose decision shall be final, shall determine if the displacement of such material was unavoidable. All overbreak shall be removed by the CONTRACTOR and disposed of as directed; however, payment will not be made for the removal and disposal of overbreak which the ENGINEER determines as avoidable. Unavoidable overbreak will be classified as "Unclassified Excavation."

The removal of existing structures and utilities required to permit the orderly progress of work will be accomplished by local agencies unless otherwise shown on the plans. All existing foundations or footings shall be excavated by the CONTRACTOR and the material disposed of as directed. All foundations thus removed shall be backfilled with suitable material and compacted.

In cut areas the subgrade under areas to be paved shall be compacted to the depths and to the densities at optimum moisture as shown on the plans or as specified in the specifications or when not otherwise shown or specified, to a minimum depth of 6 inches and to a density of not less than 90% of the maximum dry density at optimum moisture as determined by the compaction control tests specified in ASTM D1557. Any unsuitable materials encountered shall be removed and paid for as specified.

No payment or measurement for payment will be made for suitable materials removed, manipulated, and replaced in order to obtain density. Any removal, manipulation, aeration, replacement, and recompaction of suitable materials necessary to obtain the required density shall be considered as incidental to the excavation and embankment operations and shall be performed by the CONTRACTOR at no additional cost to the project.

Stones or rock fragments larger than 2 inches in their greatest dimension will not be permitted in the top 6 inches of the subgrade. The finished grading operations conforming to the typical cross section shall be completed and maintained at least one block ahead of the paving operations.

In cut areas all loose or protruding rocks on the back slopes shall be barred loose or otherwise removed to line or finished grade of slope. All cut-and-fill slopes shall be uniformly dressed to the slope, cross section, and alignment shown on the plans or as directed by the ENGINEER.

Blasting, when necessary, will be permitted only when proper precautions are taken for the protection and safety of all persons, the work, and the surrounding property. All damage done to the work or property shall be repaired at the CONTRACTOR's expense. All operations of the CONTRACTOR in connection with the transportation, storage, and use of explosives shall be approved by the City of Bismarck Fire and Inspections Department. Any approval given will not relieve the CONTRACTOR of responsibility in blasting operations.

202-3.3 BORROW EXCAVATION. When provided for in the proposal, borrow excavation shall consist of excavation made from borrow areas outside the normal grading limits. Borrow excavation shall be made only at the designated locations and within the horizontal and vertical limits as staked or as directed. Upon completion of borrow operations, the borrow area shall be finished to a neat and uniform grade acceptable to the ENGINEER.

The borrow excavation shall be handled and placed as specified in these specifications for excavation and embankment.

202-3.4 DITCH EXCAVATION. Ditch excavation shall consist of excavating for drainage ditches such as intercepting, inlet or outlet, temporary levee construction, or any other type as designated or as shown on the plans. The work shall be performed in the proper sequence with the other construction. The location of all ditches or levees shall be established on the ground. All satisfactory material shall be placed in fills; unsatisfactory material shall be placed in spoil areas as shown on the plans or removed from the project area as directed by the ENGINEER. Waste or surplus material shall be disposed of as shown on the plans or as directed by the ENGINEER. Intercepting ditches shall be constructed prior to the start of adjacent excavation operation. All necessary handwork shall be performed to secure a finish true to line, elevation, and cross section, as designated.

Ditches constructed on the project shall be maintained to the required cross section and shall be kept free from debris or obstructions until the project is accepted. Where necessary, sufficient openings shall be provided through spoil banks to permit drainage from adjacent lands. Unless otherwise specified, no separate payment will be made for ditch excavation other than for the material removed which will be paid for at the unit price for "Unclassified Excavation" or "Rock Excavation," as the case may be, if the proposal includes classification of these excavated materials.

202-3.5 EMBANKMENT FOUNDATION PREPARATION. Immediately prior to the placing of the fill materials, the entire area upon which the embankment is to be placed, except where limited by rock, shall be scarified and broken by means of a disk harrow or plow or other approved equipment to a minimum depth of 6 inches or as specified by the ENGINEER. Scarifying shall be done approximately parallel to the axis of the fill. All roots, debris, large stones, or objectionable material that would cause interference with the compaction of the foundation or fill shall be removed from the area and disposed of as directed by the ENGINEER. A thin layer (approximately 3 inches) of all the fill material shall be spread over the scarified foundation and the whole area compacted as required in the specifications. Payment will be made for the material excavated for the embankment foundation at the unit price for “Unclassified Excavation.”

Where embankments are to be placed on natural slopes steeper than 3-to-1, horizontal benches shall be constructed as shown on the plans or as directed by the ENGINEER. Payment will be made for the material excavated on the embankment slopes at the unit price for “Unclassified Excavation.”

202-3.6 STRIPPING. All vegetation such as brush, heavy sods, heavy growth of grass, decayed vegetable matter, rubbish, and any other unsuitable material within the area upon which embankment is to be placed shall be stripped or otherwise removed before the embankment is started, and in no case shall such objectionable material be allowed in or under the embankment. No direct payment will be made for stripping. The yardage removed and disposed of shall be paid for at the contract unit price per cubic yard for "Unclassified Excavation."

202-3.7 FORMATION OF EMBANKMENTS. Embankments shall be formed of satisfactory materials placed in successive horizontal layers of not more than 8 inches in loose depth for the full width of the cross section.

The grading operations shall be conducted and the various soil strata shall be placed to produce a soil structure as shown on the typical cross section or as directed by the ENGINEER. All materials placed in the embankment shall be reasonably free of organic matter such as leaves, grass, roots, and other objectionable material. Soil, granular material, shale, and any other material permitted for use in embankment shall be spread in successive layers as specified.

Earthwork operations shall be suspended at any time when satisfactory results cannot be obtained because of rain, freezing weather, or other unsatisfactory conditions of the

field. The CONTRACTOR shall drag, blade, or slope the embankment to provide proper surface drainage.

The material in the layers shall be of the proper moisture content before rolling to obtain the prescribed compaction. Wetting or drying of the material and manipulation when necessary to secure a uniform moisture content throughout the layer shall be required. Should the material be too wet to permit proper compaction or rolling, all work on all portions of the embankment thus affected shall be delayed until the material has dried to the required moisture content. Sprinkling shall be done with approved equipment that will sufficiently distribute the water. Sufficient equipment to furnish the required water shall be available at all times. Samples of all embankment materials for testing, both before and after placement and compaction, shall be completed as per Subsection 202-3.1. Based on these test results, corrections, adjustments, and modifications of methods, materials, and moisture content will be made to construct the embankment.

Rolling operation shall be continued until the embankment is compacted to not less than 85% of the maximum dry density at optimum moisture as determined by ASTM Compaction Control Test Designation D1557. Under all areas to be paved, the embankment shall be compacted to a density of not less than 90% of the maximum dry density with a moisture content falling within plus or minus 3 percent of the optimum moisture as determined by ASTM Compaction Control Test Designation D1557. On all areas outside of the pavement, curb and gutter, and sidewalk areas, no compaction will be required on the top 4 inches. Any areas inaccessible to a roller shall be consolidated and compacted by mechanical tampers.

During construction of the embankment, the CONTRACTOR shall route equipment at all times, both when loaded and when empty, over the layers as they are placed and shall distribute that travel evenly over the entire width of the embankment. The equipment shall be operated in such a manner that hardpan, cemented gravel, clay, or other chunky soil material will be broken up into small particles and become incorporated with the other material in the layer.

In the construction of embankments, starting layers shall be placed in the deepest portion of the fill; as placement progresses, layers shall be constructed approximately parallel to the finished pavement grade line.

When rock and other embankment material are excavated at approximately the same time, the rock shall be incorporated into the outer portion of the embankment and the other material shall be incorporated under the future paved areas. Stones or fragmented rock larger than 2 inches in their greatest dimension will not be allowed in the top 6 inches of the subgrade. Rock fill shall be brought up in layers as specified or as directed, and every effort shall be exerted to fill the voids with the finer material to form a dense, compact mass. Rock or boulders shall not be disposed of outside of the excavation or embankment areas, except at places and in the manner designated by the ENGINEER.

Frozen material shall not be placed in the embankment nor shall embankment be placed upon frozen material.

The CONTRACTOR shall be responsible for the stability of all embankments made under the contract and shall replace any portion which, in the opinion of the ENGINEER, has become displaced due to carelessness or negligence on the part of the CONTRACTOR.

There will be no separate measure or payment for compacted embankment. All costs incidental to placing in layers, compacting, disking, watering, mixing, sloping, and other necessary operations of the embankments will be included in the contract price for excavation, borrow, or other items.

When stockpiling of excavated material and later rehandling of such material is directed by the ENGINEER in order to produce the specified subgrade structure, the material shall be paid for at the contract unit price per cubic yard for "Unclassified Excavation."

202-3.8 EQUIPMENT. The CONTRACTOR may use any type of earth-moving, compaction, and watering equipment, provided the equipment is in a satisfactory condition and is of such capacity that the construction schedule can be maintained as planned by the CONTRACTOR and as approved by the ENGINEER in accordance with the total days or working days bid for the construction. The CONTRACTOR shall furnish, operate, and maintain such equipment as is necessary to control uniform density, layers, section, and smoothness of grade.

202-3.9 PREPARATION AND PROTECTION OF THE TOP OF THE SUBGRADE. On areas to be paved, the specified depth in cut areas and the top of embankment shall be compacted to the density specified. The typical section for areas to be paved shall be graded such that the roadway is graded to 6 inches below the elevation of the future top of curb. The remaining area behind the curb and gutter to property line shall be graded to the elevation of the future top of curb. When completed the surface shall be true to the lines, grades, and cross section shown on the plans or as directed by the ENGINEER. After all drains, structures, ducts, and other underground appurtenances along the edges or under the pavement have been completed, the subgrade shall be compacted to the depth specified at not less than 90% of the maximum dry density, at optimum moisture, as determined by ASTM Compaction Control Test Designation D1557. Any irregularities or depressions that develop during rolling shall be corrected by loosening the material at these places and adding, removing, or replacing material until the surface is smooth and uniform. Any portion of the area which is not accessible to a roller shall be compacted in lifts not to exceed 6 inches to the required density by approved mechanical tampers. The material shall be sprinkled with water during rolling or tamping, when directed by the ENGINEER.

All soft and yielding material and material which will not compact readily when rolled or tamped shall be removed as directed by the ENGINEER and replaced with suitable material. After grading operations are complete, all loose stones larger than 2 inches in

their greatest dimension shall be removed from the surface of all proposed graded paving areas and disposed of as directed by the ENGINEER.

At all times the top of the subgrade shall be kept in such condition that it will drain readily and effectively. In handling materials, tools, and equipment, the CONTRACTOR shall protect the subgrade from damage by laying planks when directed and shall be reshaped and recompacted to required density. Storage or stockpiling of materials on the top of the subgrade will not be permitted. Until the subgrade has been checked and approved, no subbase, surface course, or pavement shall be laid thereon.

202-3.10 HAUL. No payment will be made separately or directly for haul on any part of the work. All hauling will be considered a necessary and incidental part of the work, and its cost shall be considered by the CONTRACTOR and included in the contract unit price for the pay items of work involved.

202.3.11 TOLERANCES. In those areas upon which a subbase or base course is to be placed, the top of the subgrade shall be of such smoothness that, when tested with a 16-foot straightedge applied parallel and at right angles to the centerline, it shall not show any deviation in excess of 1/2 inch, or shall not be more than 0.05 of a foot from true grade as established by grade hubs or pins. Any deviation in excess of these amounts shall be corrected by loosening, adding, or removing materials, reshaping and recompacting to required density by sprinkling and rolling.

On areas to be turfed under the project or in the future, outside the sidewalk, curb and gutter and pavement limits the surface shall be of such smoothness that it will not vary more that 0.10 of a foot from true grade as established by grade hubs. Any deviation in excess of this amount shall be corrected by loosening, adding or removing materials, and reshaping.

202-4 MEASUREMENT AND PAYMENT

202-4.1 UNCLASSIFIED EXCAVATION. Unclassified Excavation shall be measured by the cubic yard (CY) in its original position by the method of average end areas of materials acceptably excavated and stripped as specified. Measurements shall not include the yardage of material excavated without authorization beyond normal slope lines, or the yardage of material used for purposes other than those directed. The plans shall state an assumed shrinkage factor to be used to compute embankment volume placed using “Unclassified Excavation.”

Payment shall be made at the unit price bid per cubic yard (CY) for "Unclassified Excavation."

202-4.2 ROCK EXCAVATION. All rock found in the excavation and not allowed to be placed in the backfill or embankment shall be classified as Rock Excavation, measured by the cubic yard (CY) and disposed of by the CONTRACTOR or as directed by the ENGINEER.

The CONTRACTOR shall place all rocks not allowed to be placed in the backfill or embankment and less than 1 cubic yard in a pile to be measured by the ENGINEER. The total volume of the stockpile shall be reduced by 25% to account for voids in the rock stockpile.

All rock greater than 1 cubic yard shall be individually measured by the ENGINEER.

Payment shall be made at the unit price bid per cubic yard (CY) for "Rock Excavation."

202-4.3 BORROW EXCAVATION. Borrow Excavation shall be measured by the cubic yard (CY) in its original position. Borrow Excavation in its original position shall include an assumed shrinkage factor to be used to compute embankment volume placed. Borrow excavation in a stockpile shall not include an allowance for shrinkage. Payment shall be made at the unit price bid per cubic yard (CY) for "Borrow Excavation."

SECTION 203 - WATERING

203-1 DESCRIPTION

This item shall consist of applying CITY OF BISMARCK furnished water required in the compaction of embankments, subgrades, subbases, base courses, and for other purposes in accordance with the requirements of these specifications or as directed by the ENGINEER.

203-2 CONSTRUCTION REQUIREMENTS

Water, when required, shall be applied at the locations, in the amounts, and during the hours, including nights, as approved by the ENGINEER. An adequate water supply shall be provided by the CITY OF BISMARCK. The equipment furnished and used by the CONTRACTOR for watering shall be of ample capacity and of such design as to assure uniform application of water in the amounts directed by the ENGINEER.

The CONTRACTOR shall furnish all fittings, hoses, and equipment used in the loading of CITY furnished water. If a water hydrant is used for furnishing water, the CONTRACTOR shall furnish a gate type control valve, approved by the ENGINEER, to control water flow. The hydrant valve shall be fully opened and under no circumstances will the hydrant valve be used for water flow control. The CONTRACTOR shall apply for a hydrant meter supplied and installed by the City of Bismarck Public Works Department and shall pay all installation and usage fees unless waived by the contract documents.

203-3 MEASUREMENT AND PAYMENT

203-3.1 WATERING. Watering shall be measured in the vehicle at the point of delivery by 1,000 gallon ("M" Gal.) units or by a meter supplied by the City of Bismarck and paid for at the unit price bid for "Watering."

SECTION 204 - SUBGRADE PREPARATION

204-1 DESCRIPTION

This work shall consist of shaping and compaction of the subgrade prior to construction of a subbase, base, or surface course and shall include excavation and/or shifting of materials resulting from rough grading, trenching or other prior construction activities. Subgrade preparation shall include all work to the depths specified on the plans or in the Special Provisions. When Subgrade Preparation depths are not specified, the depth shall be assumed to be a minimum of 6 inches below the surface of the finished subgrade.

Prior to subgrade preparation, the ENGINEER shall verify that the grading is within tolerance specified in Subsection 202-3.1. Work shall not begin on the subgrade preparation until the ENGINEER has approved that the grading has met the tolerances.

The CONTRACTOR responsible for subgrade preparation shall be required to grade a 4-foot minimum wide strip centered at the future face of curb to the elevation 0.1 foot above the bottom of curb section. Payment for curb and gutter grading shall be measured by the cubic yard and paid for at the unit price for “Unclassified Excavation” completed and accepted by the ENGINEER.

"Unstable," "Suitable," "Unsuitable," and "Unsatisfactory" soil or aggregate items are referred to in Section 202-1.

204-2 CONSTRUCTION REQUIREMENTS

204-2.1 GENERAL. In all areas, prior to placing any of the base course specified under Section 300, the entire subgrade surface shall be scarified to a specified depth of not less than 6 inches and dried or uniformly moistened to obtain required compaction. Excess suitable excavated material shall be stockpiled and reused whenever possible in the project. Stockpiled material which is reused shall be measured in its final section and paid for as Unclassified Excavation.

Excavation of material for curb and gutter installation shall be measured by the cubic yard (CY) and paid for at the unit price for “Unclassified Excavation” completed and accepted by the ENGINEER.

Excavation and hauling of material from one point to another point on the roadbed to adjust the grade line and stockpiling excess material, if any, adjacent to the project shall be considered incidental to the "Subgrade Preparation" bid items.

All rocks larger than 2 inches in size and other unsuitable material shall be removed and replaced with approved backfill material. Any portions of the subgrade not easily accessible to machine operations, such as valley gutters, shall be brought to the proper elevation and compacted by methods approved by the ENGINEER.

During the course of preparing the subgrade and until the curb and gutter and pavement courses have been constructed, it shall be the CONTRACTOR's responsibility to protect the subgrade against and repair any damage caused by adverse weather, public traffic, and the CONTRACTOR's own operations. The subgrade shall at all times be completed for a sufficient distance ahead of hauling and spreading base or surface material to allow adequate opportunity for inspection. No materials shall be placed on the subgrade until it has been checked and approved by the ENGINEER.

204-2.2 COMPACTION. The subgrade shall be compacted by approved compaction equipment. Approved compaction equipment shall include sheepsfoot rollers, pneumatic packers, mechanical packers, mechanical rammers, vibratory equipment, trucks, tractors, scrapers, motor graders, and all other types of equipment used in excavating, transporting, and placing the subgrade. Subgrade preparation depths specified on the plans or special provisions or the minimum 6 inches required below the surface of the finished subgrade shall be compacted to 90 percent of Maximum Dry Density as determined by ASTM Compaction Control Test Designation D1557 with a moisture content falling within plus or minus 3 percent of the Optimum Moisture Content as determined by said testing method. The surface after compaction shall be true to line, grade, and cross section.

The CONTRACTOR shall engage an independent soils testing laboratory, approved by the ENGINEER, to determine the soil proctors and perform the required compaction testing to be determined by the ENGINEER.

The compaction control tests for this section are based on one individual compaction test per 750 square yards of area. The CONTRACTOR shall be responsible for all retesting of failing tests and a proctor determination to represent each soil condition to be encountered on the project. The locations and depths of compaction testing shall be at the discretion of the ENGINEER during construction. Should it become necessary to require an additional number of initial compaction tests, over and above the number specified for bidding purposes, the City of Bismarck shall be responsible for all costs associated with additional testing performed by an independent testing laboratory. The CONTRACTOR, however, will be required to assume the cost of all retesting of failed tests regardless of the total number required during construction.

Compaction testing to determine densities may be accomplished with a nuclear density testing apparatus and/or the sand cone method. Should disputes arise concerning test results they will be resolved by using the sand cone method of testing.

Written reports of all test results shall be supplied to the ENGINEER and the CONTRACTOR by the testing laboratory as soon as possible. To expedite construction progress it is necessary that the CONTRACTOR and ENGINEER be furnished with the results of all tests as soon as testing is completed.

The availability of the independent testing laboratory when needed and speed of testing and reporting are to be considered the responsibility of the CONTRACTOR.

Compaction control tests as stated above shall be incidental to the price bid for 204-3.1 Subgrade Preparation.

No payment or measurement for payment will be made for suitable materials removed, manipulated, and replaced to obtain density in the specified depth of subgrade preparation. The moisture content of the subgrade materials shall fall within the range of plus or minus four (4) percent of the Optimum Moisture Content before any attempt is made to obtain the specified density. Any removal, manipulation, aeration, replacement, watering and recompaction of suitable materials necessary to obtain the required density shall be considered as incidental to the subgrade preparation operation and shall be performed by the CONTRACTOR at no additional cost to the project.

If the desired compaction cannot be obtained by manipulation, wetting or drying of the specified depth of the subgrade because the material is found to be "Unsuitable" or "Unsatisfactory," as defined in Section 202-1, or when the ENGINEER directs manipulation and wetting or drying below the specified subgrade preparation depth or when materials below the specified subgrade preparation depth must be removed because they are found to be "Unsuitable", or "Unsatisfactory", thus hampering subgrade operations, this work will be paid for in accordance with Section 126, "Extra Work" of said Construction Specifications unless a "Subcut Excavation" item is included as a bid item on the proposal for the particular unit of the project.

If the instability of suitable materials below the specified subgrade preparation depth is a result of excessive moisture from rains, surface runoff or frost action, the ENGINEER reserves the right to suspend the work to allow the materials to recover strength without any liability for the costs that may be claimed by the CONTRACTOR due to the suspension of work. Extension of time, however, will be granted in this case.

204-2.3 TOLERANCES. In those areas upon which a subbase, base, or surface course is to be placed, the top of the subgrade shall be of such smoothness that, when tested with a 16-foot straightedge applied parallel and at right angles to the centerline, it shall not show any deviation in excess of 1/2 inch, or shall not be more than 0.05 of a foot from true grade established by grade hubs or pins.

The CONTRACTOR shall perform all surveying required to prepare the subgrade, to the tolerances specified, incidental to other bid items. The CONTRACTOR shall place a survey stake at the crown line on 50-foot intervals on all streets at the elevation approved by the ENGINEER. Additional staking may be required on sharp vertical and horizontal curves and at intersections and valley gutters as determined by the ENGINEER.

Staking shall not be the responsibility of the CONTRACTOR for curb and gutter construction.

204-3 MEASUREMENT AND PAYMENT

204-3.1 SUBGRADE PREPARATION. Subgrade Preparation shall be measured by the square yard (SY) and paid for at the unit price for "Subgrade Preparation" complete and accepted by the ENGINEER.

204-3.1A SUBGRADE PREPARATION (1 FOOT DEEP). Subgrade Preparation shall be measured by the square yard (SY) and paid for at the unit price for “Subgrade Preparation (1 Foot Deep)” complete and accepted by the ENGINEER.

204-3.1B SUBGRADE PREPARATION (1.5 FEET DEEP). Subgrade Preparation shall be measured by the square yard (SY) and paid for at the unit price for “Subgrade Preparation (1.5 Feet Deep)” complete and accepted by the ENGINEER.

SECTION 205 – EROSION AND SEDIMENT CONTROL

205-1 DESCRIPTION

The CONTRACTOR shall be responsible for installing and maintaining all of the erosion and sediment control measures shown on the plans or as deemed necessary by the ENGINEER to effectively control pollution of waterways and sedimentation onto adjacent properties or into any downstream drainage facilities. Installation shall be done in accordance with the North Dakota Department of Health, Division of Water Quality "Guide to Temporary Erosion Control Measures" or plan details.

Erosion control measures shall be sufficient to contain sediments within the construction limits. If any excavation or embankment material does flow onto adjacent properties or downstream, the CONTRACTOR shall immediately rectify the problem and repair any damages.

Any failure of the erosion and sedimentation control measures shall be repaired within 48 hours of the runoff event along with any erosion damages at the CONTRACTOR's expense. The CONTRACTOR shall be required to maintain erosion and sediment control installations until such time as the project is accepted as complete by the ENGINEER.

If directed by the ENGINEER, the CONTRACTOR shall remove and dispose of the silt fence or weighted fiber roll installed before the end of the warranty period. Cleanup shall be according to Section 121 Finishing and Cleanup. All removal and cleanup items shall be considered incidental to other bid items.

205-1.1 PROTECTION OF WATER RESOURCES. The CONTRACTOR shall dispose of all fuels, lubricants, and other organic or inorganic wastes at locations approved by regulatory agencies. Fueling, lubricating, and overhauling of all equipment shall be accomplished at locations and in such a manner that contaminants can be controlled and disposed of without polluting surface or subsurface waters.

Surface drainage from cuts and fills within the project limits, whether or not complete, and from borrow and waste disposal areas, shall be held in suitable sedimentation ponds or shall be graded to control erosion within acceptable limits. Temporary erosion and sediment control measures such as berms, dikes, drains, silt fences, bales, and sedimentation basins, if required to meet the above standards, shall be provided and maintained until permanent drainage and erosion control facilities are complete and operative.

The CONTRACTOR will be required to maintain all excavating, embankments, stockpiles, haul roads, plant sites, waste areas, borrow areas, and all other work areas free from dust which would cause a hazard or nuisance to others. The CONTRACTOR must have sufficient, competent equipment on the job to control dust. Dust control will be performed as the work proceeds and whenever a dust nuisance or hazard occurs.

The CONTRACTOR shall maintain all facilities constructed for pollution control for as long as the operations creating the particular pollutant are being carried out or until the materials of concern become stabilized to the extent that pollution is no longer being created.

All other erosion and sediment control measures other than 205-3.1 “Silt Fence” and 205-3.2 “Silt Fence with Wire Backing” necessary to meet the requirements of Section 205 shall be considered incidental to other bid items.

205-2 MATERIALS

205-2.1 FILTER FABRIC. Silt fence fabric shall conform to AASHTO M 288 silt fence specification. Filter fabric shall be composed of fibers consisting of long chain synthetic polymers composed of at least 95% by weight of polyolefins, polyesters, or polyomides. The fibers shall be formed into a network such that the filaments or yarns retain dimensional stability relative to each other. The filter fabric shall be free of any treatment or coating which might adversely alter its physical properties after installation. The fabric shall be free of defects or flaws that significantly affect its physical and/or filtering properties. The fabric shall have a minimum width of 36 inches. The filter fabric shall be furnished with suitable wrapping for protection against moisture and extended ultraviolet exposure prior to placement. Installation shall be done in accordance with the North Dakota Department of Health, Division of Water Quality “Guide to Temporary Erosion Control Measures” or plan detail.

205-2.2 POSTS. Either wood or steel posts may be used. Wood posts shall be treated (Penta or Green Treated) and shall be a minimum of 5 feet long with minimum dimensions of 2 inches diameter for round posts or 1½ inches by 1½ inches for rectangular posts. Steel posts shall be a minimum of 5 feet long, weigh a minimum of 1.3 lbs/ft and have projections to aid in fastening the wire or fabric. Steel posts should also have a metal plate welded near the bottom such that when the post is driven to the proper depth, the plate will be below the ground level for added stability. Installation shall be done in accordance with the North Dakota Department of Health, Division of Water Quality “Guide to Temporary Erosion Control Measures” or plan detail.

205-2.3 WOVEN WIRE. When backing for a filter fabric silt fence is required, a steel wire fence fabric shall be used. A woven wire fence shall conform to ASTM A 116, Class 1 zinc coating for wire. The woven wire support fence shall be at least 32 inches high and a maximum opening size of 6 inches by 6 inches. The wire shall be a minimum of 14 gauge grade 60. Installation shall be done in accordance with the North Dakota Department of Health, Division of Water Quality “Guide to Temporary Erosion Control Measures” or plan detail.

205-2.4 WEIGHTED FIBER ROLL. Weighted fiber roll shall be a photodegradable, extruded netting tube filled with wood curled excelsior and a weighted inner core. The roll diameter shall be six inches and the lengths shall be as required. The weight shall be a minimum of eight and one-third pounds per foot. An adequate number of weighted fiber rolls shall be placed around an inlet to provide complete protection. Approximately

3 to 6 inches shall be left between the weighted fiber rolls and the inlet. The ends shall overlap 12 inches. When silt is one-third the height of the roll, the CONTRACTOR shall remove and dispose of the silt and debris to allow the device to function properly. The CONTRACTOR shall check the operation and maintenance of the weighted fiber roll after rainfall events until final acceptance of the contract, incidental to the price bid for "Weighted Fiber Roll."

205-3 MEASUREMENT AND PAYMENT

205-3.1 SILT FENCE. Payment for the installation and maintenance of silt fence shall be per linear foot (LF) based on a one-time installation (i.e., repair and maintenance is incidental) as measured in the field by the ENGINEER. The reuse of silt fence materials without prior approval by the ENGINEER will not be allowed.

205-3.2 SILT FENCE WITH WIRE BACKING. Payment for the installation and maintenance of silt fence with wire backing shall be per linear foot (LF) based on a one-time installation (i.e., repair and maintenance is incidental) as measured in the field by the ENGINEER. The reuse of silt fence materials with wire backing without prior approval by the ENGINEER will not be allowed.

205-3.3 WEIGHTED FIBER ROLL. Weighted Fiber Roll shall be measured by the linear foot (LF) and paid for at the unit price for "Weighted Fiber Roll" complete and accepted by the ENGINEER.

SECTION 300

BASE COURSES

SECTION 301 – SAND SUBBASE

301-1 DESCRIPTION

This item shall consist of sand subbase course constructed on a prepared subgrade or underlying course in accordance with these specifications and in conformity with the dimensions and typical cross section shown on the plans and with the lines and grades established by the ENGINEER.

301-2 MATERIALS

The sand to be furnished under this item shall conform to the Subsection 501-2.5 of these specifications.

301-3 CONSTRUCTION REQUIREMENTS

Sand subbase shall be placed, spread, shaped, and compacted prior to the placement of the pavement, sidewalk, curb, and gutter, etc. The sand subbase shall be compacted by at least two complete passes over the entire width of the forms by a vibratory compactor. Immediately prior to concrete placement, the sand subbase shall be regraded and watered thoroughly to produce a uniform wet appearance.

301-4 MEASUREMENT AND PAYMENT

301-4.1 SAND SUBBASE. Sand subbase shall be measured by the ton and paid for at the unit price bid for "Sand Subbase." Water used as specified above shall be considered incidental to the "Sand Subbase" item and separate payment shall not be made for watering.

SECTION 302 – AGGREGATE BASE AND AGGREGATE SURFACE

302-1 DESCRIPTION

This item shall consist of aggregate base and aggregate surface composed of crushed, partially crushed, or uncrushed coarse aggregate bonded with either soil or fine aggregate or both. It shall be constructed on a prepared underlying course in accordance with these specifications and shall conform to the dimensions and typical cross section shown on the plans and with the lines and grades established by the ENGINEER.

302-2 MATERIALS

It shall be the responsibility of the CONTRACTOR to furnish material which, when compacted, will support the construction equipment without showing signs of displacement.

302-2.1 GRADATION. The gradation of the aggregate base and aggregate surface material shall meet the requirements of one of the gradations given in the following table when tested in accordance with ASTM C136.

Square Mesh Sieve Size	Percent By Weight Passing Class 5 Aggregate Base	Percent By Weight Passing Class 13 Aggregate Surface
1”	100	100
3/4”	90-100	70-100
No. 4	35-70	38-75
No. 8	-	22-62
No. 30	16-40	12-45
No. 40	-	-
No. 200	4-10	7-15
P.I.	-	-
L.L.	-	-
% Shale & Rock in total sample	12	12
% L.A. Abrasion Loss	50 (max.)	50 (max.)
% Fractured Faces	10 (min.)	10 (min.)

The maximum allowable P.I. shall be 6.0 except in the cases where the P.I. computed by the formula 10 - (% of material passing the No. 40 sieve ÷ 10) results in a higher P.I. then the higher P.I. shall be the maximum allowable. The P.I. and L.L. shall be reported to the nearest whole number. When a P.I. greater than 6.0 is permitted, the maximum liquid limit shall be increased by the amount the computed P.I. exceeds 6.0.

The gradations in the table represent the limits which shall determine suitability of aggregate for use from the sources of supply. The final gradations decided on within the limits designated in the table shall be well graded from coarse to fine and shall not vary from the low limit on one sieve to the high limit on the adjacent sieves, or vice versa.

All natural material passing an 8-inch ring and retained on the 1-inch sieve shall be crushed and uniformly mixed with the uncrushed material unless otherwise specified.

The amount of the fraction of material passing the No. 200 mesh sieve shall not exceed one-half the fraction passing the No. 40 mesh sieve.

The selection of any of the gradations shown in the table shall be such that the maximum size aggregate used in any course shall not be more than two-thirds the thickness of the layer of the course being constructed.

If filler in addition to that naturally present in the aggregate base and aggregate surface material is necessary for satisfactory bonding of the material for changing the soil constants of the material passing the No. 40 mesh sieve or for correcting the gradation to the limitations of the specified gradation, it shall be uniformly blended with the aggregate base and aggregate surface material at the crushing and/or mixing plant. The material for such purpose shall be obtained from sources approved by the ENGINEER. The addition of filler may be composed of sand, but the amount of sand shall not exceed 20 percent by weight of the total combined base aggregate. The sand shall pass a No. 4 mesh sieve and not more than 5 percent by weight shall pass a No. 200 mesh sieve.

Gravel pits from which the CONTRACTOR proposes to furnish this base material shall be approved prior to hauling to the project.

Sampling of the final aggregate base and aggregate surface material shall be performed by an independent testing laboratory approved by the ENGINEER to test the composition of the mixtures, the mineral aggregates, and the in-place density of the mixture. Approval or disapproval of the material and reasons therefore will be by written order to the CONTRACTOR over the signature of the CITY ENGINEER.

302-3 CONSTRUCTION REQUIREMENTS

302-3.1 OPERATIONS IN PITS AND QUARRIES. All work involved in clearing and stripping pits and quarries, including handling of unsuitable material, shall be performed by the CONTRACTOR. All material shall be handled in a manner that shall secure a uniform and satisfactory base product. The base course material shall be obtained from sources that have been approved.

302-3.2 EQUIPMENT. All equipment necessary for the proper construction of this work shall be on the project in first-class working condition and approved by the ENGINEER before construction is permitted to start.

302-3.3 PREPARING UNDERLYING COURSE. The underlying course shall be checked and accepted by the ENGINEER before placing and spreading operations are started. Any ruts or soft, yielding places due to improper drainage conditions, hauling, or any other cause, shall be corrected and rolled to the required density before the base course is placed thereon.

Grade control between the edges of the pavement shall be accomplished by grade stakes, steel pins, or forms placed in lanes parallel to the centerline of the pavement at intervals sufficiently close that string lines or check boards may be placed between stakes, pins, or forms.

To protect the underlying course and to insure proper drainage, the spreading of the base shall begin along the centerline of the pavement on a crowned section or on the high side of the pavement with a one-way slope.

302-3.4 METHODS OF PRODUCTION.

(a) Plant Mix. When provided in the proposal, or when selected by the CONTRACTOR and approved by the ENGINEER, the aggregate base and aggregate surface material shall be uniformly blended or mixed in an approved plant. The mixing plant shall include bins for storing and batching of the aggregate, pump and tanks for water, and batch mixers of either the pugmill or drum type. All mineral aggregates shall be batched into a mixer by weight. The agitation shall be such that a thorough dispersion of moisture is obtained. The size of the batch and the time of mixing shall be fixed by the ENGINEER and shall produce the results and requirements specified. The base course material produced by combining two or more materials from different sources shall be mixed in a mixing plant described herein. The mixture material shall be at a satisfactory moisture content to obtain maximum density.

(b) Travel Plant. When the use of a traveling plant is allowed, the plant shall blend and mix the materials to meet these specifications. It shall accomplish a thorough mixing in one trip. The agitation shall be such that the dispersion of the moisture is complete. The machine shall move at a uniform rate of speed and this speed shall be regulated to fix the mixing time. If a windrow-type of travel plant is employed for mixing, the aggregate shall be placed in windrows parallel to the pavement centerline. The windrow volume shall be sufficient to cover exact areas planned. The windrow contents shall produce a mixture of the required gradation and bonding qualities. If a travel plant is used which is of the type that mixes previously spread aggregates in place, the material shall have been spread in such thickness and proportions as may be handled by the machine to develop a base course of the thickness of each layer and of the gradation required. With either type of equipment, the mixed material shall be at satisfactory moisture content to obtain the maximum density.

(c) Proportioning or Blending In-Place. When the aggregate base and aggregate surface materials are to be proportioned and mixed or blended in-place, the different layers shall be placed and spread with the relative proportions of the components of the

mixture being designated by the ENGINEER. The base aggregate shall be deposited and spread evenly to a uniform thickness and width. Then the binder or filler shall be deposited and spread evenly over the first layer. There shall be as many layers of materials added as the ENGINEER may direct to obtain required gradation and layer thickness. When the required amount of materials have been placed, they shall be thoroughly mixed and blended by means of approved graders, discs, harrows, rotary tillers, or a machine capable of combining these operations, supplemented by other suitable equipment if necessary. The mixing shall continue until the mixture is uniform throughout and accepted by the ENGINEER. Areas of segregated material shall be corrected by the addition of needed material and by remixing. Water shall be uniformly applied, prior and during the mixing operation if necessary, to maintain the material at the proper moisture content. When the mixing and blending have been completed, the material shall be bladed and dragged, if necessary, until a smooth uniform surface is obtained, true to line and grade.

(d) Materials of Proper Gradation. When the entire aggregate base and aggregate surface material from coarse to fine is secured in a uniform and well graded condition and contains approximately the proper moisture, such approved material may be handled directly to the spreading equipment. The material may be obtained from gravel pits, stockpiles, or produced from a crushing and screening plant with the proper blending. The materials from these sources shall meet the requirements for gradation, quality, and consistency. The intent of this section of these specifications is to secure materials that will not require further mixing. The base material shall be at satisfactory moisture content to obtain maximum density. Any minor deficiency or excess of moisture may be corrected by surface sprinkling or by aeration. In such instances some mixing or manipulation may be required immediately preceding the rolling to obtain the required moisture content. The final operation shall be blading or dragging, if necessary, to obtain a smooth uniform surface true to line and grade.

302-3.5 METHODS OF SPREADING.

(a) The aggregate base and aggregate surface material that is correctly proportioned or has been processed in a plant shall be placed on the prepared underlying course and compacted in layers of the thickness shown on the plans. The depositing and spreading of the material shall commence where designated and shall progress continuously without breaks. The material shall be deposited and spread in lanes in a uniform layer and without segregation of size to such loose depth that when compacted, the layer shall have the required thickness. The base aggregate shall be spread by spreader boxes or other approved devices having positive thickness controls that shall spread the aggregate in the required amount to avoid or minimize the need for hand manipulation. Dumping from vehicles in piles which require rehandling shall not be permitted. Hauling over the uncompacted base course shall not be permitted.

(b) The aggregate base and aggregate surface material that has been processed in a traveling plant or mixed and blended in place, shall be spread in a uniform layer of required depth and width and to the typical cross section. The spreading shall be by a self-powered blade grader, mechanical spreader, or other approved method. In

spreading, care shall be taken to prevent cutting into the underlying layer. The material shall be bladed until a smooth, uniform surface is obtained, true to line and grade.

(c) The aggregate base and aggregate surface shall be constructed in a layer not less than 3 inches nor more than 4 inches of compacted thickness. The aggregate as spread shall be of uniform grading with no pockets of fine or coarse materials. The aggregate, unless otherwise permitted by the ENGINEER, shall not be spread more than 2,000 square yards in advance of the rolling. Any necessary sprinkling shall be kept within these limits. No material shall be placed in snow or on a soft, muddy, or frozen course.

When more than one layer is required, the construction procedure described herein shall apply similarly to each layer.

The ENGINEER shall make tests to determine the maximum density and the proper moisture content of the base material, and this information will be available to the CONTRACTOR. The base material shall be at a satisfactory moisture content when rolling is started, and any minor variation prior to or during rolling shall be corrected by sprinkling or by aeration if necessary.

During the mixing and spreading, sufficient caution shall be exercised to prevent the incorporation of subgrade, subbase, or shoulder material in the base course mixture.

302-3.6 FINISHING AND COMPACTING. While spreading, the aggregate shall be thoroughly compacted by rolling. The rolling shall progress gradually from the sides to the center of the lane under construction, or from one side toward previously placed material by lapping uniformly each preceding rear wheel track by one-half the width of such track. Rolling shall continue until the entire area of the course has been rolled by the rear wheels. The rolling shall continue until the aggregate is thoroughly set, the interstices of the material reduced to a minimum, and until creeping of the material ahead of the roller is no longer visible. Rolling shall continue until the aggregate base and aggregate surface material has been compacted to not less than 95 percent of the maximum dry density at optimum moisture as determined by the compaction control tests specified in ASTM D1557 with a moisture content falling within plus or minus 3 percent of optimum moisture content. Blading and rolling shall be done alternately as required or directed to obtain a smooth, even, and uniformly compacted base.

The course shall not be rolled when the underlying course is soft or yielding or when the rolling causes undulation in the base course. When the rolling develops irregularities that exceed 1/2 inch when tested with a 16-foot straightedge, the irregular surface shall be loosened, refilled with the same kind of material as that used in constructing the course, and rolled again as required.

In areas inaccessible to rollers, the aggregate base and aggregate surface material shall be tamped thoroughly with approved mechanical tampers.

The sprinkling during rolling, if necessary, shall be in the amount and by equipment approved by the ENGINEER.

302-3.7 SURFACE TEST. After the course has been completely compacted, the surface shall be tested for smoothness and accuracy of grade and crown. Any portion lacking the required smoothness or failing in accuracy of grade or crown shall be scarified, reshaped, recompacted, and otherwise manipulated as the ENGINEER may direct until the required smoothness and accuracy are obtained. The finished surface shall not vary more than 1/2 inch from a 16-foot straightedge when applied to the surface parallel with and at right angles to the centerline.

302-3.8 THICKNESS. The thickness of the aggregate base and aggregate surface shall be determined by depth tests or cores taken at intervals in such manner that each test shall represent no more than 300 square yards. When the base deficiency is more than 1/2 inch, the CONTRACTOR shall correct such areas by scarifying, adding satisfactory base mixture, rolling, sprinkling, reshaping, and finishing in accordance with these specifications. The CONTRACTOR shall replace at its expense the base material where borings have been taken for test purposes.

302-3.9 PROTECTION. Work on the aggregate base and aggregate surface shall not be accomplished during freezing temperatures nor when the subgrade is wet. When the aggregates contain frozen materials or when the underlying course is frozen, the construction shall be stopped.

Hauling equipment may be routed over completed portions of the aggregate base and aggregate surface, provided no damage results, and provided that such equipment is routed over the full width of the base course to avoid rutting or uneven compaction. However, the ENGINEER in charge shall have full and specific authority to stop all hauling over completed or partially completed base course when in his opinion such hauling is causing damage. Any damage resulting to the base course from routing equipment over the base course shall be repaired by the CONTRACTOR at its own expense.

302-3.10 MAINTENANCE. Following the completion of the aggregate base and aggregate surface, the CONTRACTOR shall perform all maintenance work necessary to keep the aggregate base and aggregate surface in a condition satisfactory for priming. After priming, the surface shall be kept clean and free from foreign material. The base course shall be properly drained at all times. If cleaning is necessary, or if the prime coat becomes disturbed, any work or restitution necessary shall be performed at the expense of the CONTRACTOR.

Before preparations begin for application of a surface treatment or for a surface course, the base course shall be allowed to partially dry until the average moisture content of the full depth of base is less than 80 percent of the optimum moisture of the base mixture. The drying shall not continue to the extent that the surface of the base becomes dusty with consequent loss of binder. If during the curing period the surface of

the base dries too fast, it shall be kept moist by sprinkling until such time as the prime coat is applied as directed.

302-3.11 TRUCK SCALES. The aggregate base and aggregate surface shall be weighed on approved scales furnished by the CONTRACTOR or on public scales at the CONTRACTOR's expense. Scales shall be inspected for accuracy and sealed as often as the ENGINEER deems necessary.

302-4 MEASUREMENT AND PAYMENT

302-4.1 CLASS 5 AGGREGATE BASE. Class 5 Aggregate Base shall be measured by the ton in place and paid for at the unit price bid for “Class 5 Aggregate Base.” This price shall be full compensation for furnishing all materials and for all operations, hauling, and placing of these materials and for all labor, equipment, tools, and incidentals necessary to complete this item.

302-4.2 CLASS 13 AGGREGATE SURFACE. Class 13 Aggregate Surface shall be measured by the ton in place and paid for at the unit price bid for “Class 13 Aggregate Surface.” This price shall be full compensation for furnishing all materials and for all operations, hauling, and placing of these materials and for all labor, equipment, tools, and incidentals necessary to complete this item.

302-4.3 WATERING. Water used under this item shall be in accordance with and paid for under Section 203.

SECTION 304 – AC STABILIZED BASE

304-1 DESCRIPTION

This item shall consist of a base course composed of mineral aggregate and bituminous material, mixed in a central mixing plant and placed on a prepared subgrade in accordance with these specifications and in conformity with the dimensions and typical cross sections shown on the plans and with lines and grades established by the ENGINEER.

The base course shall be constructed as shown on the plans in lifts not to exceed 3 inches in thickness. 3 ~~1/2~~ inch maximum lift thickness will be waived if the CONTRACTOR is able to demonstrate by means of a test section that compaction, texture, and surface tolerance can be obtained for a thicker lift. If the result of the test is satisfactory, the ENGINEER will authorize the CONTRACTOR in writing to construct the thicker lift.

304-2 MATERIALS

304-2.1 AGGREGATE. The aggregate shall consist of crushed stone, crushed gravel, gravel, sand gravel, sand or other natural granular, and approved material which have essentially the same qualities and meet all requirements when combined within the limits for gradation.

The aggregate shall be tough, durable, and sound and shall consist of angular fragments reasonable uniform in density and quality. It shall be free of soil, roots, and other organic matter. The physical characteristics and quality of the materials shall be conditionally approved by the ENGINEER, in stockpile, at the plant site.

Aggregate (fine and coarse) shall be sampled in accordance with ASTM Standard D75 for aggregate sampling.

Aggregate for all gradation shall not contain more than 5 percent (maximum allowable percentage) by weight of lightweight particles in accordance with ASTM Standard C123 for lightweight pieces in aggregate.

The coarse aggregate (that portion retained on the No. 8 sieve) for all gradations shall not show more than 40 percent wear when abraded in accordance with ASTM Standard C131 for Resistance to Degradation by the Los Angeles Abrasion Method. In addition, the coarse aggregate when subjected to five (5) cycles of the soundness test (ASTM Standard C88) shall have a weighted loss not greater than 12 percent when sodium sulfate is used or 18 percent when magnesium sulfate is utilized.

The minimum weight percentage allowable for that portion of the aggregate retained on the No. 4 sieve shall have at least one fractured face for all classes.

304-2.2 FILLER. Filler, if required, shall consist of finely divided mineral matter such as rock dust, slag dust, hydrated lime, hydraulic cement, fly ash, loess, or other suitable material matter and shall conform to ASTM Standard Specification D242 for mineral fillers.

304-2.3 BITUMINOUS MATERIAL. The bitumen shall be 58-28 performance-graded asphalt cement or as approved by the ENGINEER. A certificate of asphalt cement material shall be submitted for each mixture supplied, for each load of asphalt cement delivered to the hot mix plant.

The asphalt cement shall conform to ASTM D946 and shall be mixed at a temperature falling within the range of 250°F to 325°F.

304-2.4 JOB MIX FORMULA. The CONTRACTOR shall submit for the ENGINEER's written approval a job mix formula for the mixture to be supplied for the project. The job mix formula with the allowable tolerances shall be within the master range specified for the particular type of bituminous material. The job mix formula for each mixture shall establish a single percentage of aggregate passing each required sieve size and a single percentage of bituminous material to be added to the aggregate.

The mineral aggregate for the base course shall be of such size that the percentage composition by weight as determined by laboratory sieves shall conform to the gradations specified. The final gradations shall be within the designated limits shall be well graded from coarse to fine and shall not vary from the low limit on one sieve to the high limit on adjacent sieves or vice versa. The bituminous content of the mixture shall be calculated on a percentage basis by weight of the total mix.

The tabulated composition limits shall govern, but a closer control appropriate to the job materials will be required for the specific project in accordance with the established job mix formula. The following job mix tolerances shall be applied to the job mix formula to establish a job control grading band. The full range of tolerances will still apply if application of the job mix tolerances results in a job control grading band outside the master grading band.

Material	Tolerance
Aggregate passing No. 50 or larger sieves	+ or – 6%
Aggregate passing No. 200 sieves	+ or – 2%
Bitumen Content	+ or - 0.4%
Mixing Temp.	+ or - 20°F

Should a change be made in sources of materials, a new job mix formula shall be established prior to any new materials being used. Should unsatisfactory results or unforeseen conditions make it necessary, a new job mix formula may be established at the discretion of the ENGINEER.

The job mix formula for each mixture shall be in effect until modified in writing by the ENGINEER.

The aggregate shall be accepted in stockpile at the plant site. The bituminous material shall be conditionally accepted at the source. The plant mixed material shall be accepted after blending and mixing at the plant.

304-3 COMPOSITION OF MIXTURE

The mineral aggregate for the base course shall be of such size that the percentage composition by weight as determined by laboratory sieves will conform to the gradation specified. The percent by weight for the bituminous material shall be within the limits given. The bituminous content of the mixture shall be calculated on a percentage basis by weight of the total mix.

The composition limits tabulated shall govern, but a closer control appropriate to the job materials will be required for the specific project in accordance with the job mix formula. The final gradation decided on within the limits designated in the table shall be well graded from coarse to fine and shall not vary from the low limit on one sieve to the high limit on the adjacent sieves or vice versa.

A sample of the coarse and fine aggregate shall be washed to determine the percentage of the total material passing the No. 200 mesh sieve; of the amount of the material passing the No. 200 mesh sieve, at least one-half shall pass the No. 200 mesh sieve by dry sieving.

The percentage of bituminous material by weight to be added to the aggregate shall be specified by the ENGINEER on the basis of preliminary laboratory tests and field sieve analysis.

For each appropriate job mix, the mixture shall meet the following requirements according to ASTM Standard D6927 for Marshall Stability plus the stated limitations of voids filled and flow.

	MIX CLASSES	
	Class B	**Class A**
No. of Blows (per side)	50	50
Stability	1500	1800
Flow (hundredth of an inch)	8-18	8-16
Percent Air Voids		
Base Course	3-8	3-8
Surface Course	3-5	3-5
Percent Voids Mineral Aggregate	13 Min	13 Min

Determine the maximum theoretical density of each sample taken which shall be used to calculate air voids.

The aggregate shall conform to the following gradations as specified and all requirements contained therein:

AGGREGATE GRADATION

Square Mesh Sieve Size	Percent by Weight Passing Mix Classes Class B	Class A
5/8”	100	100
1/2”	70-100	70-100
No. 4	40-70	40-70
No. 8	33-55	33-55
No. 16	25-45	25-45
No. 30	15-35	15-35
No. 50	10-30	10-30
No. 200	2-7	2-7
Shale	5%	5%
LA Abrasion (max)	40%	40%
Plasticity Index (max)	3	Non Plastic per AASHTO T-90
Fractured Faces (+No.4)	min. 65%	min. 95%
Crushed Fines (-No.4)	min. 40%	min. 60%

304-4 EQUIPMENT

304-4.1 EQUIPMENT AND ORGANIZATION. All methods and equipments, tools, plants, and machinery used for handling materials and executing any part of the work shall be subject to the approval of the ENGINEER before the work is started. If unsatisfactory, they shall be changed and improved as required.

304-4.2 BITUMINOUS MIXING PLANT. General. Adequate storage space shall be provided to prevent intermingling of stockpiles containing separated aggregate sizes until the aggregates are delivered into the plant. The various units of the plant shall be designed and coordinated to permit uniform, uninterrupted production under the normal operating conditions. The plant shall be provided with means for readily obtaining representative samples and for calibrating and checking the proportions of each ingredient used in the mixture.

(a) Requirement for all Plants. Mixing plants shall be of sufficient capacity and coordinated to adequately handle the proposed bituminous construction.

(1) Plant Scales. Scales shall be accurate to within 0.5 percent of the required maximum load. Poises shall be designed to be locked in any position to prevent

unauthorized change of position. In lieu of plant and truck scales, the CONTRACTOR may provide an approved automatic printer system to print the weights of the material delivered, provided the system is used in conjunction with an approved automatic batching and mixing control system. Such weights shall be evidenced by a weigh ticket for each load. Scales shall be inspected and sealed as often as the ENGINEER may deem necessary to assure their continued accuracy. The CONTRACTOR shall have on hand not less than ten 50-pound weights for testing the scales.

(2) Equipment for Preparation of Bituminous Material. Tanks for the storage of bituminous material shall be equipped to heat and hold the material at the required temperatures. Heating shall be accomplished by steam coils, electricity, or other approved means so that flame(s) will not contact the tank. The circulating system for the bituminous material shall be designed to assure proper and continuous circulation during the operating period. Provisions shall be made for measuring and sampling storage tanks.

(3) Feeder for Drier. The plant shall be provided with accurate mechanical means for uniformly feeding the aggregate into the drier to obtain uniform production and temperature.

(4) Drier. The plant shall include a drier(s) which continuously agitates the aggregate during the heating and drying process.

(5) Screens. Plant screens capable of screening all aggregate to the specified sizes and proportion and having normal capacities in excess of the full capacity of the mixer shall be provided.

(6) Bins. The plant shall include storage bins of sufficient capacity to supply a mixer operation at full capacity. Bins shall be arranged to assure separate and adequate storage of appropriate fractions of the mineral aggregates. When used, separate dry storage shall be provided for filler or hydrated lime, and the plant shall be equipped to feed such material into the mixer. Each bin shall be provided with overflow pipes of such size and at such location to prevent backup of material into other compartments or bins. Each compartment shall be provided with its own individual outlet gate constructed so as to prevent leakage. The gates shall cut off quickly and completely. Bins shall be so constructed that samples may be obtained readily. Bins shall be equipped with adequate telltale devices which indicate the position of the aggregates in the bins at the lower quarter points.

(7) Bituminous Control Unit. Satisfactory means, either by weighing or metering, shall be provided to obtain the specific amount of bituminous material in the mix. Means shall be provided for checking the quantity or rate of flow of bituminous material into the mixer.

(8) Thermometric Equipment. Dual armored thermometer of adequate range shall be fixed in the bituminous feed line at a suitable location near the charging valve of the mixer unit.

The plant shall also be equipped with an approved thermometric instrument placed at the discharge chute of the drier to indicate the temperature of the heated aggregates. The ENGINEER may require replacement of any thermometer by an approved temperature recording apparatus for better regulation of the temperature of aggregates.

(9) Dust Collector. The plant shall be equipped with a dust collector to waste or return uniformly to the hot elevator all or any part of the material collected.

(10) Truck Scales. The bituminous mixture shall be weighed on an approved scale furnished by the CONTRACTOR or on public scales at the CONTRACTOR's expense. Scales shall be inspected and sealed as often as the ENGINEER deems necessary to assure their accuracy.

(11) Safety Requirements. Adequate and safe stairways to the mixer platform and sampling points shall be provided, and guarded ladders to other plant units shall be placed at all points where accessibility to plant operations is required. Accessibility to the top of truck bodies shall be provided by a suitable device to enable the ENGINEER to obtain samples and mixture temperature data. Means shall be provided to raise and lower scale calibration equipment, sampling equipment, and other similar equipment between the ground and the mixer platform. All gears, pulleys, chains, sprockets, and other dangerous moving parts shall be thoroughly guarded. Ample and unobstructed passage shall be maintained at all times in and around the truck loading area. This area shall be kept free of drippings from the mixing platform.

(b) Cold Feed Control. The CONTRACTOR may elect to operate the hot plant without plant screens. The basic requirements of this method of operation are to remove all plant screens with the exception of the scalping screen. Permission to continue under this option may be rescinded upon failure to maintain production within the specified gradation limits.

The volume or tonnage placed in each of the two or more stockpiles shall be such a significant portion of the whole tonnage produced as to enable adequate control of the gradation within the job mix formula.

Each individual aggregate shall be fed through a separate feeder that has a positive feed and that can be easily and accurately calibrated. The feed shall be quick adjusting and shall maintain a constant and uniform flow throughout the range of its calibration.

(1) Batch Plants and Continuous Mix Plants. The point of acceptance for the physical properties of the aggregates will be in the stockpiles at the plant site. Acceptance testing for aggregate gradation will be performed just prior to the addition of bituminous material to the mixture.

In batch plants, a surge bin shall be provided between the drier and the batch plant; the discharge into the weigh hopper shall be from one bin only which shall discharge into the center of the weigh hopper. The amount of aggregate in the bin at any one time

shall not exceed one batch in weight and shall be fed into the bin in a manner that will prevent sluffing and segregation.

In continuous mix plants, a surge bin and mechanical feeder shall be provided. The storage in each bin used shall be limited in amount so that sluffing and segregation will not occur. If more than one bin is used, separation shall be accomplished in such a manner as to insure uniform flow to each bin and preclude segregation of the total material as obtained from the individual bins.

(c) Dryer Drum Plants. An approved dryer drum mixing process will be permitted in lieu of pugmill mixing. The system shall provide positive weight control of the cold aggregate feed by use of a belt scale or other device which will automatically regulate the feed gate and permit instant correction of variations in load. The cold feed flow shall be automatically coupled with the bitumen flow to maintain the required proportions. Proportioning shall be within the tolerances specified in the job mix formula. The system shall be equipped with automatic burner controls and shall provide for temperature sensing of the bituminous mixture at discharge.

The moisture contents of the bituminous mixture at discharge from the mixer shall not exceed 3 percent. The temperature of the bituminous mixture at discharge from the mixer shall not exceed 300°F. The temperature of the mix at laydown shall be not less than 225°F. The actual mixing temperature shall be adjusted as directed by the ENGINEER within the allowable limitations to best suit construction conditions.

304-4.3 HAULING EQUIPMENT. Trucks used for hauling bituminous mixtures shall have tight, clean, smooth metal beds which have been lightly coated with a minimum amount of paraffin oil, lime solution, or other approved material to prevent the mixture from adhering to the beds. In adverse weather, each truck shall have a suitable cover to protect the mixture.

304-4.4 BITUMINOUS PAVERS. Bituminous Pavers shall be self-contained, power-propelled units, provided with an activated screen or strike-off assembly, heated if necessary. It shall be capable of spreading and finishing courses of bituminous plant mix material which will meet the specified thickness, smoothness, and grade. The paver shall be capable of spreading and finishing courses of bituminous plant mix material in lanes not less than 10 feet in width and shall be capable of operating at forward speeds consistent with satisfactory laying of the mixture.

The paver shall have a receiving hopper of sufficient capacity for a uniform spreading operation. The hopper shall be equipped with a distribution system to place the mixture uniformly in front of the screed.

The screed or strike-off assembly shall effectively produce a finished surface of the required evenness and texture without tearing, shoving or gouging the mixture.

304-4.5 ROLLERS. Rollers shall be in good condition, capable of reversing without backlash, and shall operate at slow speeds to avoid displacement of the bituminous

mixture. The number, type and weight of rollers used shall be sufficient to compact the mixture to the required density while the mixture is still in a workable condition. The use of equipment which results in excessive crushing of the aggregate will not be permitted.

304-5 CONSTRUCTION REQUIREMENTS

304-5.1 WEATHER LIMITATIONS. The base course shall be constructed only when the surface is dry, the subgrade is not frozen, the atmospheric temperature is above 30°F, and the weather is not foggy or rainy. The temperature requirement may be waived, but only when so directed by the ENGINEER.

304-5.2 PREPARATION OF BITUMINOUS MATERIAL. The bituminous material shall be heated to the mixing temperature specified in Subsection 304-2.3 in a manner that will avoid local overheating and provide a continuous supply of the bituminous material to the mixer at a uniform temperature at all times.

304-5.3 PREPARATION OF MINERAL AGGREGATE. The aggregate for the mixture shall be dried and heated at the paving plant before entering the mixer. When introduced into the mixer, the combined aggregate shall not contain more than 0.5 percent moisture. Water in the aggregate shall be removed by heating to the extent that there is no subsequent foaming in the mixture prior to the placing of the material. The aggregate shall be heated to temperature as designated by the job formula within the job tolerance specified. The maximum temperature and rate of heating shall be such that no permanent damage occurs to the aggregates. Particular care shall be taken that aggregates high in calcium or magnesium content are not damaged by heating. The aggregate shall be screened to specified sizes and conveyed into separate bins ready for mixing with bituminous material.

304-5.4 PREPARATION OF BITUMINOUS MIXTURE. Before delivery, the aggregate shall be mixed with the bituminous material at a central mixing plant. The mixture shall be prepared at a temperature as shown in Subsection 304-2.3.

The dry aggregates, prepared as specified in Subsection 304-5.3 shall be combined in the plant in the proportionate amounts of each fraction of aggregate required to meet the specified gradation. The quantity of aggregate for each batch shall be determined, measured, and conveyed into the mixer. In case of volumetric proportioning, the size of the grate openings shall be determined and the gates locked in position.

The quantity of the bituminous material for each batch of calibrated amount shall be determined by the ENGINEER. The bituminous material shall be measured by weight or volume and introduced into the mixer at the specified temperature, using the lowest range possible for adequate mixing and spreading. For batch mixtures, all mineral aggregates shall be in the mixer before the bituminous material is added. The exact temperature within the specified range shall be fixed by the ENGINEER. As determined by the ENGINEER, the mixing shall continue for the time necessary to coat all particles uniformly. This time is dependent upon the mix designs and the type of mixing equipment used.

304-5.5 TRANSPORTATION AND DELIVERY OF THE MIXTURE. The mixture shall be transported from the mixing plat to the point of use in vehicles such as described in Subsection 304-4.3. The mixture shall be placed at a minimum temperature of 225°F. When mixture is being placed during warm weather and the ENGINEER has determined that satisfactory results can be obtained at lower temperatures, he may direct that the mixture be mixed and delivered at the lower temperatures.

Loads shall not be sent out so late as to interfere with spreading and compacting the mixture during daylight unless artificial light, satisfactory to the ENGINEER, is provided. The mixture shall be delivered at a temperature within the tolerance specified in the approved job formula.

304-5.6 SPREADING AND LAYING

(a) Preparation for Placing. Immediately before placing the bituminous mixture, the existing underlying course shall be cleaned of loose or deleterious materials.

The mixture shall be laid only upon an approved underlying course which is dry and only when weather conditions are suitable. No mixture shall be placed when the air temperature away from the artificial heat is 30°F or lower, unless so directed by the ENGINEER. The ENGINEER may, however, permit work of his character to continue when overtaken by sudden rains, up to the amount which may be in transit from the plant at the time, provided the mixture is within the temperature limits specified.

Placing shall commence at the point(s) farthest from the mixing plant and progress continuously toward the plant, unless otherwise ordered by the ENGINEER. Hauling over material already placed shall not be permitted until the material has been thoroughly compacted as specified and allowed to cool to atmospheric temperature.

(b) Machine Spreading. Upon arrival, the mixture shall be dumped into an approved bituminous paver and immediately spread to the full width required. It shall be struck off in a uniform layer of such depth that, when the work is completed, it will have the required thickness and will conform to the grade and surface contour required. The speed of the paver shall be regulated to eliminate the pulling and tearing of the bituminous mat.

The mixer shall be placed in strips of a minimum width of 10 feet. To insure proper drainage, the spreading shall begin along the centerline of the pavement on a crowned section or on the high side of the pavement with a one-way slope. After the first strip or width has been compacted, the second width shall be placed, finished, and compacted in the same manner as the first width. After the second strip has been placed and rolled, a 10-foot straightedge shall be placed across the longitudinal joint to determine if the surface conforms to grade and contour requirements.

Exposed vertical edges of paved strips shall be free of all accumulations of dirt or other foreign material before any mixture is spread in an adjacent lane. If joint faces become

dry or dusty, the contract surfaces shall be given a brush coat of asphalt. In lieu of painting the contract surfaces, the CONTRACTOR may use a joint heater approved by the ENGINEER. If the spreading machine should drift from an adjacent lane during construction, the unfilled space shall be carefully filled with fresh hot mixture obtained from truck or the hopper of the spreading machine. Stealing mixture from that already spread to fill up these areas shall not be permitted.

In limited areas where due to irregularities or unavoidable obstacles the use of mechanical spreading and finishing equipment is not practical, the mixture may be hand spread.

When hand spreading is permitted, the mixture shall be dumped on approved dump sheets outside the area upon which it is to be spread, and then distributed into place immediately using hot shovels. It shall be spread with hot rakes in a uniformly loose layer to the full width required and of such depth that, when the work is completed, it will have the required thickness and will conform to the grade and surface contour shown on the plans.

304-5.7 COMPACTION OF MIXTURE. After spreading, the mixture shall be thoroughly and uniformly compacted with power rollers as directed by the ENGINEER. Rolling of the mixture shall begin as soon after spreading as it will bear the roller without undue displacement or hair checking. On the first strip spread, rolling shall start in the center and continue toward either edge. On subsequent strips laid, rolling shall start on the edge adjacent to previously laid material and continue toward the opposite edge.

Initial rolling shall be done longitudinally. The rollers shall overlap on successive trips. Alternate trips of the roller shall be of slightly different lengths, and cross rolling shall not exceed more than one-half the width of the pavement or crowned sections. The speed of the roller shall at all times be slow to avoid displacement of the hot mixture. Any displacement occurring as a result of reversing the direction of the roller or from any other cause shall be corrected at once by rakes and fresh mixture.

Sufficient rollers shall be furnished to handle the output of the plant. Rolling shall continue until all roller marks are eliminated, the surface is of uniform texture and true to grade and cross section, and a density of at least 92 percent of the laboratory density specified in the job mix formula per Subsection 304-4 is obtained.

To prevent adhesion of the mixture to the roller, the wheels shall be kept properly moistened, but excessive water will not be permitted.

In areas not accessible to the roller, the mixture shall be thoroughly compacted with hot hand tampers.

Any mixtures which become loose and broken, mixed with dirt, or in any way defective prior to the application of the finish coat, shall be removed and replaced with fresh hot mixture and immediately compacted to conform with the surrounding area. This shall be done at the CONTRACTOR's expense.

304-5.8 JOINTS

(a) General. The mixture at the joints shall comply with the surface requirements and present the same uniformity of texture, density, smoothness, etc., as other sections of the course. In the formation of all joints, provision shall be made for proper bond with the adjacent course for the specified depth on the course. Joints shall be formed by cutting back on the previous day's run to expose the full depth of the course. The exposed edge shall then be given a light paint coat of asphalt as required by the ENGINEER and the fresh mixture raked against the joint, thoroughly tamped with tampers and rolled.

(b) Transverse. The placing of the course shall be continuous as possible. The roller shall pass over the unprotected end of the freshly laid mixture only when discontinuing the laying of the course.

(c) Longitudinal. The placing of the course shall be as specified and in such a manner that the joint is exposed for the shortest period possible.

304-5.9 SHAPING EDGES. While the surface is being compacted and finished, the CONTRACTOR shall carefully trim the outside edges of the pavement to the proper alignment. The edge so formed shall be beveled while still hot with the back of the rake or a smoothing iron and thoroughly compacted by tampers or by other satisfactory methods.

304-5.10 SURFACE TESTS. Tests for conformity with the specified crown and grade shall be made by the CONTRACTOR immediately after initial compression. Any variation shall be corrected by the removal or addition of materials and by continuous rolling.

The finished surface shall not vary more than 3/8 inch when tested with a 10-foot straightedge applied parallel with or at right angles to the centerline.

After the completion of final rolling, the smoothness of the course shall again be tested; the humps or depressions exceeding the specified tolerances or that retain water on the surface shall be corrected immediately as directed by the ENGINEER. This shall be done at the CONTRACTOR's expense.

304-5.11 DENSITY AND TESTING REQUIREMENTS FOR BITUMINOUS PAVEMENTS. The CONTRACTOR shall engage an <u>independent</u> testing laboratory, approved by the ENGINEER, to test the composition of the mixtures, the mineral aggregates, and the in-place density of the mixture.

(a) Density. AC Base Course shall be compacted to 92 percent of Marshall Density. The density of the compacted bituminous pavement shall be determined in sub lots of 1,500 square yards per each lift.

Each day's haul will be considered a "lot" and each "lot" shall be divided into acceptance sub lots not to exceed 1,500 square yards, unless the control strip method outlined below is used. Densities per sub lot will be taken at random with a minimum of one (1) nuclear density per sub lot, and the mean density in each sub lot shall equal or exceed the specified density. A minimum of 10 percent of the sub lots shall be cored.

Densities shall be taken by a Nuclear Gauge Tester in accordance with ASTM D2950 or by the Coring Method.

Compaction methods and equipment used shall be approved by the ENGINEER.

During the course of bituminous pavement construction, it may be deemed necessary by the ENGINEER to verify pavement composition and/or the results obtained by the Nuclear Density Tester. This will be accomplished by removing suitable sized samples of the completed pavement. The CONTRACTOR shall remove the samples and replace the pavement at no extra charge. If the pavement is deficient in composition, compaction, or thickness, satisfactory correction shall be made immediately.

Should the CONTRACTOR require any of the above verification sampling, he may do so provided he agrees to assume all costs incurred including the testing of the sample.

(b) Control Strip Method. If the ENGINEER determines that through the CONTRACTOR's efforts and the test results the specified percent (%) of Marshall Density cannot be obtained, a control strip shall be used to establish the density criteria for the particular pavement area involved.

The subbase on which the control strip is to be constructed shall be approved by the ENGINEER prior to the construction of said strip. The ENGINEER may abandon the control strip criteria or require a new control strip when a change in materials or a change in construction methods is observed.

The control strip shall be constructed with blended materials meeting specifications and approved by the ENGINEER. The control strip shall cover not less than 300 square yards at the specified pavement depth, and shall remain in place as part of the completed work.

Compaction of the control strip shall begin as soon as possible after the mixture is placed. Compaction shall be uniform over the entire surface. During compaction, pavement densities will be determined by the CONTRACTOR with a portable nuclear device. When the ENGINEER determines density increases less than 1 lb. per cubic foot per roller pass, the rolling shall cease provided a minimum of three (3) roller coverages have been completed. Roller or rollers shall be approved by the ENGINEER. The mean density shall be determined by ten (10) random density tests within the control strip. The control strip density determination shall be the responsibility of the CONTRACTOR.

The remainder of the work in which the control strip is to govern shall be divided into acceptance strips containing no more than 1,500 square yards. The density of each acceptance strip shall be obtained by the results of five (5) nuclear densities, the mean density of which shall not be less than 98 percent of the control strip density accepted by the ENGINEER. No individual test shall be less than 95 percent of the control strip density.

If the mean density of the acceptance strip does not conform to the requirements stated herein, or if an individual test value does not meet the requirements stated herein, the CONTRACTOR shall continue its compactive effort until the required density is obtained.

It is intended that acceptance density testing will be accomplished while the bituminous mixture is hot enough to permit further densification if such is shown to be necessary.

After the required density has been attained in the acceptance strips, further finish rolling may be necessary to remove roller marks or other surface irregularities.

The ENGINEER reserves the right to require testing of individual areas which are apparently defective based upon visual examination and to reject any area that does not have at least 95 percent of the mean density of the control strip.

(c) Testing of Aggregate and Bituminous Mixture. One (1) dry belt sample shall be taken in accordance with ASTM D75 for each increment of 1,000 tons of bituminous pavement produced with a minimum of one (1) dry belt sample taken and tested per day. The dry sample shall be tested for gradation in accordance with Section 304-3 or the Standard Specifications.

One (1) bituminous mixture sample shall be taken per day in accordance with ASTM D979 for each increment of 1,000 tons of bituminous pavement produced. The bituminous mixture shall be tested in accordance with ASTM 2041 Theoretical Maximum Specific Gravity, ASTM 6927 Stability and Flow, ASTM 3203 Air Voids, and D6995 Voids in Mineral Aggregate (VMA). The bituminous mixture shall also be tested to determine the bitumen content by an extraction in accordance with ASTM D2172. The gradation of the mineral aggregate shall also be determined after the extraction is made.

The CONTRACTOR must keep track of daily tonnages of each material produced and a total tonnage to date quantity. This tonnage information along with the asphalt cement (cutoff) percentage must be completed on a form which can be acquired at the City of Bismarck Engineering Department, and sent to the testing laboratory before 9:00 a.m. the next day. The testing laboratory SHALL then test the material properties, fill out the remainder of the form, then forward it back to the CONTRACTOR and then to the CITY OF BISMARCK. Communication between the CONTRACTOR, testing laboratory, and the CITY is essential. The testing laboratory must be notified at least one (1) hour prior to any paving activities. If the CONTRACTOR's paving activities extend beyond 5:00

p.m., the CITY and the testing laboratory shall be notified prior to 4:00 p.m. that day, and not later than 4:00 p.m. on Friday for any anticipated work on the weekend.

Test for percent of fractured faces will be determined by the percentage of fractured faces for each dry belt sample taken.

(d) Payment and Reports. The cost of all said testing shall be considered incidental to Subsection 304-6.1 AC Stabilized Base.

The time, locations, depths, and frequency of testing shall be at the discretion of the ENGINEER during construction. Should it become necessary to require an additional number of initial tests over and above the frequency specified herein, the CITY OF BISMARCK will assume the responsibility to arrange for the additional testing, except as outlined herein under "Compaction."

The CONTRACTOR, however, will be required to assume the cost of all testing to determine the limits of an area not meeting specifications and subsequent retesting of said area after corrections have been completed.

Written reports of all test results shall be supplied to the ENGINEER and the CONTRACTOR by the testing laboratory as soon as possible. To expedite construction progress, it is necessary that the CONTRACTOR and ENGINEER be furnished with the results of all tests as soon as testing is completed.

The availability of the independent testing laboratory when needed and speed of testing and reporting are to be considered the responsibility of the CONTRACTOR.

304-5.12 BITUMINOUS AND AGGREGATE MATERIAL CONTRACTOR'S RESPONSIBILITY. Samples of the bituminous and aggregate materials that the CONTRACTOR proposes to use, together with a statement of their source and character, shall be submitted to the ENGINEER; approval must be obtained before the use of such material begins. The CONTRACTOR shall require the manufacturer or producer of the bituminous and aggregate materials to furnish material subject to this and all other pertinent requirements of the contract. Only those materials that have demonstrated performance under the proposed design requirements will be accepted.

The ENGINEER or his authorized representative shall have access at all times to all parts of the paving plant for the purpose of inspecting equipment, conditions operation of the plant, for verification of weights or proportions and character of materials, and to determine temperatures maintained in the preparation of the mixtures.

The CONTRACTOR shall furnish vendor's certified test reports for each tanker, carload, or equivalent of bitumen shipped to the project. The report shall be delivered to the ENGINEER before permission is granted for use of the material. The furnishing of the vendor's certified test report for the bituminous material shall not be interpreted as a basis for final acceptance. All such test reports shall be subject to verifications by testing samples of materials received for use on the project.

304-6 MEASUREMENT AND PAYMENT

304-6.1 AC STABILIZED BASE (CLASS). The AC Stabilized Base Material shall be measured by the ton of bituminous mixture and paid for at the unit price bid for "AC Stabilized Base (Class)" complete in place and accepted by the ENGINEER. No deduction will be made for the weight of the asphalt cement in the mixture. Batch weights will not be permitted for method of measurement. Asphalt cement shall be paid per 401-6.4 Asphalt Cement pay item.

SECTION 305 – MIXED IN-PLACE BASE COURSE

305-1 DESCRIPTION

This item shall consist of a base course composed of existing stabilized gravel base with several seal coats referred to in the CITY OF BISMARCK as "Hard-surfacing," windrowed, mixed in a traveling pugmill type plant where bituminous material shall be added and reconstructed on the prepared underlying course in accordance with these specifications and shall conform to the dimensions and typical cross sections shown on the plans and the lines and grades established by the ENGINEER. After a 4-inch depth has been windrowed, the street shall be shaped to section under Section 202 to correct existing crown and make provision for the wearing course material.

305-2 MATERIAL

305-2.1 AGGREGATE. The aggregate material to be added, if any, shall conform to Subsections 304-2.1 and 304-2.2.

305-2.2 BITUMINOUS MATERIAL. The bituminous material shall be SM-K Emulsified Cationic Asphalt. The mixing temperature shall range from 75°F to 130°F. The bitumen content shall be 6 percent of the total weight of the mixed material.

305-3 COMPOSITION OF MIXTURE

The base aggregate shall consist of existing seal coat material and existing stabilized gravel base which shall be sufficiently dried by aerating with motor graders prior to mixing and laydown. Additional stabilized gravel base required for subcut and/or build-up of crown shall conform to Subsection 304-3.

305-4 CONSTRUCTION REQUIREMENTS

305-4.1 WEATHER LIMITATIONS. The base course shall be constructed only when the surface is dry, the atmospheric temperature is above 45°F, and the weather is not foggy or rainy. The temperature requirement may be waived, but only when so directed by the ENGINEER.

305-4.2 EQUIPMENT

(a) General. All methods and equipment, tools, and other plants or machinery used for handling materials and executing any part of the work shall be subject to the approval of the ENGINEER before the work is started. If unsatisfactory, they shall be changed and improved as required.

(b) Traveling Plant Mixer. The traveling pugmill plant shall be self-propelled or tractor-drawn and capable of maintaining a uniform rate of travel while mixing. It shall be mounted on wheels or tread equipment of such type that when loaded to capacity, it will not rut or damage the subgrade or subbase course. The device for picking up the

aggregates from the window shall take up the loose material and leave the underlying course clean without damage. Plants equipped for drying the aggregates before adding the bituminous material shall be constructed to allow for no loss of mineral filler or segregation of the aggregate. The equipment for proportioning the aggregate and bituminous material shall accurately measure the specified amounts of material for the mix while the machine is in operation. The plant shall be capable of thoroughly combining the aggregates and bituminous material into a mixture of uniform color with all the particles completely coated, and it shall also be capable of depositing the processed mixture on the subgrade or subbase.

Other machines capable of accomplishing the required results, both in regard to uniform and depth in one pass, will be acceptable under this specification.

Approved methods shall be provided for accurately controlling the correct amount of filler, portland cement, or lime, and for their induction into the mixture at the specified time.

(c) Spreading Equipment. Blade graders for windrowing aggregate and for spreading processed material shall be self-powered.

(d) Rolling Equipment. The rollers shall be an approved type and in good condition as determined by the ENGINEER.

305-4.3 PREPARATION OF UNDERLYING COURSE. Prior to mixing and laydown, a 4-inch depth of existing material shall be windrowed to facilitate excavating and shaping the subgrade to proper section in accordance with Section 202.

305-4.4 MIXING. The aggregate, windrowed and prepared as specified, shall then be mixed with the bituminous material in the traveling mixing plant and then deposited for spreading.

The quantity of bituminous material calibrated for continuous mix shall be determined by the ENGINEER and introduced into the mixer. The mixing shall continue until all particles have been coated and a homogeneous mixture obtained.

Before spreading, the mixture shall be examined by the ENGINEER who shall determine that the mixing is complete and satisfactory. Should the mixture show an excess, deficiency, or uneven distribution of bituminous material, the unsatisfactory condition shall be corrected by the addition of the required aggregate or bituminous material and by remixing. Mixing or spreading shall be done only when authorized by the ENGINEER.

305-4.5 SPREADING AND FINISHING.

(a) General. Spreading shall not be started until the subgrade or subbase has been properly prepared, compacted, and approved by the ENGINEER.

Grade control between the edges of the pavement shall be accomplished by grade stakes or steel grade pins placed in lanes parallel to the centerline of the pavement and at intervals sufficiently close that string lines may be stretched between the stakes or pins.

When practicable, to protect the subgrade and to insure proper drainage, the mixing and spreading shall begin along the centerline of the pavement on a crowned section or on the high side of the pavement with a one-way slope.

(b) Spreading and Blade Finishing. The mixture shall be placed in lanes parallel to the centerline of the pavement and ending each day's run for the full width of the lane.

After the mixing has been completed, the mixed material shall be spread to the required width and depth by a self-powered blade grader, mechanical spreader, or other approved method. In spreading from a windrow, care shall be taken to prevent cutting into the underlying course. If necessary, to prevent such cutting, a layer of the mixture approximately 1/2-inch thick shall be left at the bottom of the windrow. The mixture shall be spread and cured in thin layers. If necessary, the surface shall be continually bladed until a smooth uniform surface, true to line, grade and cross section has been developed. Should the mixture show an excess, deficiency, or uneven distribution of bituminous material, corrective action shall be taken to alleviate these conditions.

After the base course material has been mixed, spreading shall not be started if threatening weather is apparent. The ENGINEER shall have control of the spreading, aeration, and rolling procedure. The CONTRACTOR shall regulate its operations in a scheduled manner by mixing only such amounts that can be spread, aerated, and compacted within relatively short periods. Those areas which become wet shall be dried and remixed with bituminous material. The remixing including applications of the bituminous material shall be handled to insure a thorough and uniform coating of the aggregate. Any wet mixture that remains unsatisfactory after remixing shall be removed.

305-4.6 COMPACTION OF MIXTURE. Aeration after mixing and prior to rolling shall be continued until the mixture is in suitable condition for proper compaction. After each layer has been placed and cured, it shall be thoroughly and uniformly compacted by rollers, as specified. Blading shall continue during the rolling only if so ordered by the ENGINEER.

Initial rolling shall be done longitudinally, overlapping at least 12 inches on successive trips. Alternate trips of power rollers shall be of slightly different lengths. Rolling shall continue until all roller marks are eliminated and until no deflection, rutting, and shoving is noticeable under pneumatic tired rollers.

The speed of the rollers shall at all times be slow to avoid displacement of the mixture. Any displacement occurring as a result of reversing the direction or the roller or from any other cause shall be corrected at once using rakes and fresh mixture. Sufficient rollers shall be furnished to handle the spreading output and aeration of the mixture.

Places not accessible to the roller shall be thoroughly compacted with tampers. The surface of the mixture after compaction shall be smooth and true to the established crown and grade.

Any mixture which becomes loose and broken, mixed with dirt, or defective in any way prior to acceptance, shall be removed and replaced at the CONTRACTOR's expense with fresh mixture which shall be compacted to conform with the surrounding area. Skin patching shall not be allowed. Any mixture remaining unbonded after rolling shall be removed and replaced.

305-4.7 SURFACE TESTS. The finished surface shall conform to the requirements of Subsection 401-4.13.

305-4.8 THICKNESS. The CONTRACTOR shall remove suitable size samples of the of the completed base course from locations designated by the ENGINEER to enable him to determine the thickness. When the base deficiency exceeds 1/2 inch, the CONTRACTOR shall correct such areas by scarifying, adding satisfactory base mixture, rolling, reshaping, and finishing in accordance with these specifications. The CONTRACTOR shall replace the base material where borings have been taken for test purposes.

305-4.9 MAINTENANCE. The surface of the base course shall be maintained in its finished condition until any surface course or surface treatment provided in the contract is placed thereon and until the contract is completed and accepted.

305-4.10 BITUMINOUS AND AGGREGATE MATERIAL CONTRACTOR'S RESPONSIBILITY. Samples of the bituminous and aggregate materials that the CONTRACTOR proposes to furnish, together with a statement of their source and character, shall be submitted to the ENGINEER; approval must be obtained before the use of such material begins. The CONTRACTOR shall require the manufacturer or producer of the bituminous and aggregate materials to furnish material subject to this and all other pertinent requirements of the contract. Only those materials that have demonstrated performance under the proposed design requirements will be accepted.

The CONTRACTOR shall furnish vendor's certificate test reports for each tanker, carload, or equivalent of bitumen shipped to the project. The report shall be delivered to the ENGINEER before permission is granted for use of the material. The furnishing of the vendor's certificate test report for the bituminous material shall not be interpreted as a basis for final acceptance. All such test reports shall be subject to verifications by testing samples of materials received for use on the project.

305-5 MEASUREMENT AND PAYMENT

305-5.1 MIXED IN-PLACE BASE COURSE. The Mixed In-Place Base Course shall be measured by the square yard (SY) and paid for at the unit price bid for "Mixed In-Place Base Course" complete in place and accepted by the ENGINEER.

305-5.2 BITUMINOUS MATERIAL. The Bituminous Material shall be measured by weighing and this weight converted to gallons at 60°F based on the unit weight shown on the certified analysis report on each car. Payment shall be made at the unit price bid per gallon (GAL) for "Bituminous Material."

SECTION 400

FLEXIBLE SURFACE COURSES

SECTION 401 – AC PATCH, LEVELING AND SURFACE COURSES

401-1 DESCRIPTION

This item shall consist of a patch, leveling, and/or surface course composed of mineral aggregate and bituminous material, mixed in a central mixing plant and placed on a prepared base course in accordance with these specifications and in conformity with the dimensions and typical cross sections shown on the plans and with the lines and grades established by the ENGINEER.

The AC patch, leveling, and/or surface course shall be constructed as shown on the plans in lifts not to exceed 2½ inches in thickness. The 2½-inch maximum lift thickness will be waived if the CONTRACTOR is able to demonstrate by means of a test section that compaction, texture, and surface tolerance can be obtained for a thicker lift. If the result of the test is satisfactory, the ENGINEER will authorize the CONTRACTOR in writing to construct the thicker lift.

401-2 MATERIALS

401-2.3 AGGREGATE. The aggregate shall consist of crushed stone, crushed gravel, gravel, sand gravel, sand, or other natural granular and approved material which have essentially the same qualities and meet all requirements when combined within the limits for gradation.

The aggregate shall be tough, durable, and sound and shall consist of angular fragments reasonably uniform in density and quality. The aggregate shall be free of soil, roots, and other organic matter. The physical characteristics and quality of the materials shall be conditionally approved by the ENGINEER, in stockpile, at the plant site.

Aggregate (fine and coarse) shall be sampled in accordance with ASTM Standard D75 for aggregate sampling.

Aggregate for all gradation shall not contain more than 5 percent (maximum allowable percentage) by weight of lightweight particles in accordance with ASTM Standard C123 for lightweight pieces in aggregate.

The coarse aggregate (that portion retained on the No. 8 sieve) for all gradations shall not show more than 40 percent wear when abraded in accordance with ASTM Standard C131 for Resistance to Degradation by the Los Angeles Abrasion Method. In addition, the coarse aggregate when subjected to five (5) cycles of the soundness test (ASTM

Standard C88) shall have a weighted loss not greater than 12 percent when sodium sulfate is used or 18 percent when magnesium sulfate is utilized.

The minimum weight percentage allowable for that portion of the aggregate retained on the No. 4 sieve shall have at least one fractured face for all mix classes.

401-2.4 FILLER. Filler, if required, shall consist of finely divided mineral matter such as rock dust, slag dust, hydrated lime, hydraulic cement, fly ash, loess, or other suitable material matter and shall conform to ASTM Standard Specification D242 for mineral fillers.

401-2.5 BITUMINOUS MATERIAL. The bitumen shall be 58-28 performance-graded asphalt cement or as approved by the ENGINEER. A certificate of asphalt cement material shall be submitted for each mixture supplied, for each load of asphalt cement delivered to the hot mix plant.

The asphalt cement shall conform to ASTM D946 and shall be mixed at a temperature falling within the range of 250°F to 325°F.

401-2.6 JOB MIX FORMULA. The CONTRACTOR shall submit for the ENGINEER's written approval, a job mix formula for each mixture to be supplied for the project. The job mix formula with the allowable tolerances shall be within the master range specified for the particular type of bituminous material. The job mix formula for each mixture shall establish a single percentage of aggregate passing each required sieve size and a single percentage of bituminous material to be added to the aggregate.

The mineral aggregate for the surface course shall be of such size that the percentage composition by weight as determined by laboratory sieves shall conform to the gradations specified. The final gradations shall be within the designated limits and shall be well graded from coarse to fine and shall not vary from the low limit on one sieve to the high limit on adjacent sieves or vice versa. The bituminous content of the mixture shall be calculated on a percentage basis by weight of the total mix.

The tabulated composition limits shall govern, but a closer control appropriate to the job materials will be required for the specific project in accordance with the established job mix formula. The following job mix tolerances shall be applied to the job mix formula to establish a job control grading band. The full range of tolerances will still apply if application of the job mix tolerances results in a job control grading band outside the master grading band.

MATERIAL	TOLERANCE
Aggregate passing No. 50 or larger sieves	+ or - 6%
Aggregate passing No. 200 sieves	+ or - 2%
Bitumen Content	+ or - 0.4%
Mixing Temp.	+ or - 20°F

Should a change be made in sources of materials, a new job mix formula shall be established prior to any new materials being used. Should unsatisfactory results or unforeseen conditions make it necessary, a new job mix formula may be established at the discretion of the ENGINEER.

The job mix formula for each mixture shall be in effect until modified in writing by the ENGINEER.

The aggregate shall be accepted in stockpile at the plant site. The bituminous material shall be conditionally accepted at the source. The plant mixed material shall be accepted after blending and mixing at the plant.

When directed by the ENGINEER, the gradation of aggregates for AC Leveling Course, 1 inch or less in thickness, shall be class B with the exception of 100 percent passing the 1/2-inch sieve.

401-3 COMPOSITION OF MIXTURE

The mineral aggregate for the AC leveling and/or surface course shall be of such size that the percentage composition by weight as determined by laboratory sieves will conform to the gradation specified. The percent by weight for the bituminous material shall be within the limits given. The bituminous content of the mixture shall be calculated on a percentage basis by weight of the total mix.

The composition limits tabulated shall govern, but a closer control appropriate to the job materials will be required for the specified project in accordance with job mix formula. The final gradations decided on within the limits designated in the table shall be well graded from coarse to fine and shall not vary from the low limit on one sieve to the high limit on the adjacent sieves or vice versa.

For each appropriate job mix, the mixture shall meet the following requirements according to ASTM Standard D6927 for Marshall Stability plus the stated limitations of voids filled and flow.

	MIX CLASSES	
	Class B	**Class A**
No. of Blows (per side)	50	50
Stability	500	1800
Flow (hundredth of an inch)	8-18	8-16
Percent Air Voids		
Base Course	3-8	3-8
Surface Course	3-5	3-5
Percent Voids Mineral Aggregate	13 Min	13 Min

Determine the maximum theoretical density of each sample taken which shall be used to calculate air voids.

The aggregate shall conform to the following gradations as specified and all requirements contained therein:

AGGREGATE GRADATION

Square Mesh Sieve Size	**Class B**	**Class A**
5/8"	100	100
1/2"	70-100	70-100
No. 4	40-70	40-70
No. 8	33-55	33-55
No. 16	25-45	25-45
No. 30	15-35	15-35
No. 50	10-30	10-30
No. 200	2-7	2-7
Shale	5%	5%
LA Abrasion (max)	40%	40%
Plasticity Index (max)	3	Non Plastic per AASHTO T-90
Fractured Faces (+No.4)	min. 65%	min. 95%
Crushed Fines (-No.4)	min. 40%	min. 60%

A sample of the coarse and fine aggregates shall be washed to determine the percentage of the total material passing the No. 200 mesh sieve; of the amount of the material passing the No. 200 mesh sieve, at least one-half shall pass the No. 200 mesh sieve by dry sieving.

The percentage of bituminous material by weight to be added to the aggregate shall be specified by the ENGINEER on the basis of preliminary laboratory tests and field sieve analysis.

The minimum percentage of crushed fines material passing a No. 4 sieve shall be composed of fractured material produced by a crushing process. The CONTRACTOR shall demonstrate that the crushing operation produces this result.

The mixture of the AC Leveling Course shall contain a bituminous oil content 0.2 percent more than the job mix formula for AC Surface Course (Class B).

401-4 EQUIPMENT

401-4.1 EQUIPMENT AND ORGANIZATION. All methods and equipment tools, plants, and machinery used for handling materials and executing any part of the work shall be subject to the approval of the ENGINEER before the work is started. If unsatisfactory, they shall be changed and improved as required.

401-4.2 BITUMINOUS MIXING PLANT. GENERAL. Adequate storage space shall be provided to prevent intermingling of the stockpiles containing separated aggregate sizes until the aggregates are delivered into the plant. The various units of the plant shall be designed and coordinated to permit uniform, uninterrupted production under the normal operating conditions. The plant shall be provided with means for readily obtaining representative samples and for calibrating and checking the proportions of each ingredient used in the mixture.

(a) Requirements for all Plants. Mixing plants shall be of sufficient capacity and coordinated to adequately handle the proposed bituminous construction.

(1) Plant Scales. Scales shall be accurate to within 0.5 percent of the required maximum load. Poises shall be designated to be locked in any position to prevent unauthorized change of position. In lieu of plant and truck scales, the CONTRACTOR may provide an approved automatic printer system to print the weights of the material delivered, provided the system is used in conjunction with an approved automatic batching and mixing control system. Such weights shall be evidenced by a weigh ticket for each load. Scales shall be inspected and sealed as often as the ENGINEER may deem necessary to assure their continued accuracy. The CONTRACTOR shall have on hand not less than ten 50-pound weights for testing the scales.

(2) Equipment for Preparation of Bituminous Material. Tanks for the storage of bituminous material shall be equipped to heat and hold the material at the required temperatures. Heating shall be accomplished by steam coils, electricity, or other approved means so that flame(s) will not contact the tank. The circulating system for the bituminous material shall be designed to assure proper and continuous circulation during the operating period. Provision shall be made for measuring and sampling storage tanks.

(3) Feeder for Dryer. The plant shall be provided with accurate mechanical means for uniformly feeding the aggregate into the dryer to obtain uniform production and temperature.

(4) Dryer. The plant shall include a dryer(s) which continuously agitates the aggregate during the heating and drying process.

(5) Screens. Plant screens, capable of screening all aggregate to the specified sizes and proportion and having normal capacities in excess of the full capacity of the mixer, shall be provided.

(6) Bins. The plant shall include storage bins of sufficient capacity to supply a mixer operating at full capacity. Bins shall be arranged to assure separate and adequate storage of appropriate fractions of the mineral aggregates. When used, separate dry storage shall be provided for filler or hydrated lime, and the plant shall be equipped to feed such material into the mixer. Each bin shall be provided with overflow pipes of such size and at such location to prevent backup of material into other compartments or bins. Each compartment shall be provided with its own individual outlet gate constructed so as to prevent leakage. The gates shall cut off quickly and completely. Bins shall be so constructed that samples may be obtained readily. Bins shall be equipped with adequate telltale devices which indicate the position of the aggregates in the bins at the lower quarter points.

(7) Bituminous Control Unit. Satisfactory means, either by weighing or metering, shall be provided to obtain the specified amount of bituminous material in the mix. Means shall be provided for checking the quantity or rate of flow of bituminous material into the mixer.

(8) Thermometric Equipment. Dual armored thermometers of adequate range shall be fixed in the bituminous feed line at a suitable location near the charging valve of the mixer unit.

The plant shall also be equipped with an approved thermometric instrument placed at the discharge chute of the dryer to indicate the temperature of the heated aggregates. The ENGINEER may require replacement of any thermometer by an approved temperature recording apparatus for better regulation of the temperature of aggregates.

(9) Dust Collector. The plant shall be equipped with a dust collector to waste or return uniformly to the hot elevator all or any part of the material collected.

(10) Truck Scales. The bituminous mixture shall be weighed on an approved scale furnished by the CONTRACTOR or on public scales at the CONTRACTOR's expense. Scales shall be inspected and sealed as often as the ENGINEER deems necessary to assure their accuracy.

(11) Safety Requirements. Adequate and safe stairways to the mixer platform and sampling points shall be provided, and guarded ladders to other plant units shall be placed at all points where accessibility to plant operations is required. Accessibility to the top of truck bodies shall be provided by a suitable device to enable the ENGINEER to obtain samples and mixture temperature data. Means shall be provided to raise and lower scale calibration equipment, sampling equipment, and other similar equipment between the ground and the mixer platform. All gears, pulleys, chains, sprockets, and other dangerous moving parts shall be thoroughly guarded. Ample and unobstructed passage shall be maintained at all times in and around the truck loading area. This area shall be kept free of dripping from the mixing platform.

(b) Cold Feed Control. The CONTRACTOR may elect to operate the hot plant without plant screens. The basic requirements of this method of operation are to remove all plant screens with the exception of the scalping screen. Permission to continue under this option may be rescinded upon failure to maintain production within the specified gradation limits.

The volume or tonnage placed in each of the two or more stockpiles shall be such a significant portion of the whole tonnage produced as to enable adequate control of the gradation within the job mix formula.

Each individual aggregate shall be fed through a separate feeder that has a positive feed and that can be easily and accurately calibrated. The feed shall be quick adjusting and shall maintain a constant and uniform flow throughout the range of its calibration.

(1) Batch Plants and Continuous Mix Plants. The point of acceptance for the physical properties of the aggregates will be in the stockpiles at the plant site. Acceptance testing for aggregate gradation will be performed just prior to the addition of bituminous material to the mixture.

In batch mix plants, a surge bin shall be provided between the dryer and the batch plant and the discharge into the weigh hopper shall be from one bin only which shall discharge into the center of the weigh hopper. The amount of aggregate stored in the bin at any one time shall not exceed one batch in weight and shall be fed into the bin in a manner that will prevent sluffing and segregation.

In continuous mix plants, a surge bin and mechanical feeder shall be provided. The storage in each bin used shall be limited in amount so that sluffing and segregation will not occur. If more than one bin is used, separation shall be accomplished in such a manner as to insure flow to each bin and preclude segregation of the total material as obtained from the individual bins.

(c) Dryer Drum Plants. An approved dryer drum mixing process will be permitted in lieu of pugmill mixing. The system shall provide positive weight control of the cold aggregate feed by use of a belt scale or other device which will automatically regulate the feed gate and permit instant correction of variations in load. The cold feed flow shall be automatically coupled with the bitumen flow to maintain the required proportions. Proportioning shall be within the tolerances specified in the job mix formula. The system shall be equipped with automatic burner controls and shall provide for temperature sensing of the bituminous mixture at discharge.

The moisture contents of the bituminous mixture at discharge from the mixer shall not exceed 3 percent. The temperature of the bituminous mixture at discharge from the mixer shall not exceed 300°F. The temperature of the mix at laydown shall be not less than 225° F. The actual mixing temperature shall be adjusted as directed by the ENGINEER within the allowable limitations to best suit construction conditions.

401-4.3 HAULING EQUIPMENT. Trucks used for hauling bituminous mixtures shall have tight, clean, smooth metal beds which have been lightly coated with a minimum amount of paraffin oil, lime solution, or other approved material to prevent the mixture from adhering to the beds. In adverse weather, each truck shall have a suitable cover to protect the mixture.

401-4.4 BITUMINOUS PAVERS. Bituminous Pavers shall be self-contained, power-propelled units, provided with an activated screed or strike-off assembly, heated if necessary. It shall be capable of spreading and finishing courses of bituminous plant mix material which will meet the specified thickness, smoothness, and grade. The paver shall be capable of spreading and finishing courses of bituminous plant mix material in lanes not less than 10 feet in width and shall be capable of operating at forward speed consistent with satisfactory laying of the mixture.

The paver shall have a receiving hopper of sufficient capacity for a uniform spreading operation. The hopper shall be equipped with a distribution system to place the mixture uniformly in front of the screed.

The screed or strike-off assembly shall effectively produce a finished surface of the required evenness and texture without tearing, shoving or gouging the mixture.

401-4.5 ROLLERS. Rollers shall be in good condition, capable of reversing without backlash, and shall operate at slow speeds to avoid displacement of the bituminous mixture. The number, type, and weight of rollers used shall be sufficient to compact the mixture to the required density while the mixture is still in a workable condition. The use of equipment which results in excessive crushing of the aggregate will not be permitted.

401-5 CONSTRUCTION REQUIREMENTS

401-5.1 WEATHER AND SEASONAL LIMITATIONS. The AC Patch, Leveling or Surface Course shall be constructed only when the surface is dry, the atmospheric temperature is above 40°F, and the weather is not foggy or rainy. The temperature requirement may be waived, but only when so directed by the ENGINEER.

401-5.2 PREPARATION OF BITUMINOUS MATERIAL. The bituminous material shall be heated to the mixing temperature specified in Subsection 401-2.3 in a manner that will avoid local overheating and provide a continuous supply of the bituminous material to the mixer at a uniform temperature at all times.

401-5.3 PREPARATION OF MINERAL AGGREGATE. The aggregate for the mixture shall be dried and heated at the paving plant before entering the mixer. When introduced into the mixer, the combined aggregate shall not contain more than 0.5 percent moisture. Water in the aggregate shall be removed by heating to the extent that there is no subsequent foaming in the mixture prior to the placing of material. The aggregate shall be heated to temperature as designated by the job formula within the job tolerance specified. The maximum temperature and rate of heating shall be such that no permanent damage occurs to the aggregates. Particular care shall be taken that

aggregates high in calcium or magnesium content are not damaged by heating. The aggregate shall be screened to specified sizes and conveyed into separate bins ready for mixing with bituminous material.

401-5.4 PREPARATION OF BITUMINOUS MIXTURE. Before delivery, the aggregate shall be mixed with the bituminous material at a central mixing plant. The mixture shall be prepared at a temperature as shown in Subsection 401-2.3.

The dry aggregates, prepared as specified in Subsection 401-5.3, shall be combined in the plant in proportionate amounts of each fraction of aggregate required to meet the specified gradation. The quantity of aggregate for each batch shall be determined, measured, and conveyed into the mixer. In case of volumetric proportioning, the size of the grate openings shall be determined and the gates locked in position.

The quantity of bituminous material for each batch of calibrated amount shall be determined by the ENGINEER. The bituminous material shall be measured by weight or volume and introduced into the mixer at the specified temperature using the lowest range possible for adequate mixing and spreading. For batch mixers, all mineral aggregates shall be in the mixer before the bituminous material is added. The exact temperature within the specified range shall be fixed by the ENGINEER. As determined by the ENGINEER, the mixing shall continue for the time necessary to coat all particles uniformly. This time is dependent upon the mix designs and the type of mixing equipment used.

401-5.5 TRANSPORTATION AND DELIVERY OF THE MIXTURE. The mixture shall be transported from the mixing plant to the point of use in vehicles such as described in Subsection 401-4.3.

The mixture shall be placed at a minimum temperature of 225°F. When mixture is being placed during warm weather, and the ENGINEER has determined that satisfactory results can be obtained at lower temperatures, he may direct that the mixture be mixed and delivered at the lower temperatures.

Loads shall not be sent out so late as to interfere with spreading and compacting the mixture during daylight unless artificial light satisfactory to the ENGINEER is provided. The mixture shall be delivered at a temperature within the tolerance specified in the approved job formula.

401-5.6 SPREADING AND LAYING

(a) Preparation for Placing. Immediately before placing the bituminous mixture, the existing underlying course shall be cleaned of loose or deleterious materials and tacked in accordance with Section 402.

The mixture shall be laid only upon an approved underlying course which is dry and only when weather conditions are suitable. No mixture shall be placed when air temperature away from the artificial heat is 40°F or lower, unless so directed by the

ENGINEER. The ENGINEER may, however, permit work of this character to continue when overtaken by sudden rains up to the amount which may be in transit from the plant at the time provided the mixture is within the temperature limits specified.

Placing shall commence at the point(s) farthest from the mixing plant and progress continuously toward the plant unless otherwise ordered by the ENGINEER. Hauling over material already placed shall not be permitted until the material has been thoroughly compacted as specified and allowed to cool to atmospheric temperature.

(b) Machine Spreading AC Leveling Course. The AC Leveling Course material that has been processed in a plant shall be placed on the prepared underlying course and compacted in layers of the thickness shown on the plans. The depositing and spreading of the material shall commence where designated and shall progress continuously without breaks. The material shall be deposited and spread in lanes in a uniform layer and without segregation of size to such loose depth that when compacted, the layer shall have the required thickness.

The leveling course material shall be spread in a uniform layer of required depth and width and to the typical cross section. The spreading shall be by a self-powered blade grader, mechanical spreader, or other approved method. In spreading, care shall be taken to prevent cutting into the underlying layer. The material shall be bladed until a smooth, uniform surface is obtained, true to line and grade.

When a self-powered blade grader is used, the policy is to not permit the application of the AC Leveling Course when the atmospheric temperature is less than 75°F. The self-powered blade grader must also be equipped with radial or smooth tires when used for the application of the AC Leveling Course.

When the depth leveled is greater than 1 inch, AC Surface Course shall be applied to a depth within 1 inch or less of finished grade and the remaining portion filled with AC Leveling Course. The AC Leveling Course Material as spread shall be of uniform grading with no pockets of fine or coarse materials. The material, unless otherwise permitted by the ENGINEER, shall not be spread more than 1,000 square yards in advance of the rolling. Any necessary sprinkling shall be kept within these limits.

When more than one layer is required, the construction procedure described herein shall apply similarly to each layer.

(c) Machine Spreading AC Surface Course. Upon arrival, the AC Surface Course shall be dumped into an approved bituminous paver and immediately spread to the full width required. It shall be struck off in a uniform layer of such depth that when the work is completed, it will have the required thickness and will conform to the grade and surface contour required. The speed of the paver shall be regulated to eliminate the pulling and tearing of the bituminous mat.

The mixture shall be placed in strips of a minimum width of 10 feet. To insure proper drainage, the spreading shall begin along the centerline of the pavement on a crowned

section or on the high side of the pavement with a one-way slope. After the first strip or width has been compacted, the second width shall be placed, finished, and compacted in the same manner as the first width. After the second strip has been placed and rolled, a 10-foot straightedge shall be placed across the longitudinal joint to determine if the surface conforms to grade and contour requirements.

Exposed vertical edges of paved strips shall be free of all accumulations of dirt or other foreign material before any mixture is spread in an adjacent lane. If joint faces become dry or dusty, the contact surfaces shall be given a brush coat of asphalt. In lieu of painting the contact surfaces, the CONTRACTOR may use a joint heater approved by the ENGINEER. If the spreading machine should drift from an adjacent lane during construction, the unfilled space shall be carefully filled with fresh hot mixture obtained from trucks or the hopper of the spreading machine. Stealing mixture from that already spread to fill up these areas shall not be permitted.

In limited areas where due to irregularities or unavoidable obstacles the use of mechanical spreading and finishing equipment is not practical, the mixture may be hand spread.

When hand spreading is permitted, the mixture shall be dumped on approved dump sheets outside the area upon which it is to be spread and then distributed into place immediately using hot shovels. It shall be spread with hot rakes in a uniformly loose layer to the full width required and of such depth that when the work is completed, it will have the required thickness and will conform to the grade and surface contour shown on the plans.

(d) AC Patch. AC Patch cuts will be designated and marked by the ENGINEER. The CONTRACTOR shall make all cuts with a saw or other approved method so as to obtain a vertical face on the remaining asphalt. The cuts shall be made to a depth so as not to disturb the remaining asphalt during removal of the patch area.

Removal of the patch area on joint failures shall be done by means of a pavement milling machine.

The type of failure shall be determined after the asphalt has been removed and the base inspected. After the base has been inspected, the CONTRACTOR may be required to enlarge the cut area if the subbase conditions warrant doing so.

Areas of AC pavement or subbase failures shall be repaired to the following dimensions per Standard Detail 400-1.

AC Pavement Failure

- A minimum of 4½ inches deep, or the depth of the existing pavement (whichever is greater).

- A maximum of 4 inches wide along traverse and longitudinal cracks. Pavement removed shall be disposed of by the CONTRACTOR and the cost considered incidental to the unit price per ton for 401-6.3 AC Patch. Replacement of the patch area shall be done as per Standard Detail No. 400-1 Typical Joint Failure Repair in accordance with 401-6.3 Patch.

- Areas larger than 4 inches wide or as large as necessary to correct other failed areas. Pavement removed shall be done in accordance with 406-4.1 Asphalt Removal and disposed of by the CONTRACTOR. Replacement of the patch area shall be done as per Standard Detail No. 400-1 AC Pavement Failure in accordance with 304-6.1B AC Stabilized Base (Class B) and 401-6.2B AC Surface Course (Class B).

AC Pavement Surface Failure

The CONTRACTOR may be required to remove the Surface Course only in areas of surface failures to a maximum depth of 2 inches. Removal of the pavement failure shall be done by means of a pavement milling machine and in accordance with 404-4.1 Milling Pavement Surface. Replacement of the milled area shall be done in accordance with 401-6.2B AC Surface Course (Class B) or 401-6.2A AC Surface Course (Class A).

Subbase Failure

- Excavate to 12 inches minimum or 36 inches maximum depth.

- **On areas less than 4 feet wide** - The excavation shall be done as per Standard Detail No. 400-1 Subbase Failure in accordance with Section 202 Excavation and Embankments and the cost considered incidental to the unit price per ton for 302-4.1 Stabilized Gravel Base.

- After excavating the subbase failure, the area shall be backfilled with stabilized gravel base, as specified under Section 302 within 6 inches of finished grade and the remaining portion of the excavation backfilled with 3½ inches AC Stabilized Base and 2½ inches AC Surface Course.

- Pavement removed shall be disposed of by the CONTRACTOR and the cost considered incidental to the unit price per ton for 401-6.3 AC Patch. Replacement of the patch area shall be done in accordance with 304-6.1B AC Patch.

- **On areas 4 feet wide or larger** - The excavation shall be done as per Standard Detail No. 400-1 Subbase Failure in accordance with Section 202 Excavation and Embankments and the cost considered incidental to the unit price per ton for 302-4.1 Stabilized Gravel Base.

- Pavement removed shall be made in accordance with 406-4.1 Asphalt Removal.

- After excavating the subbase failure, the area shall be backfilled with stabilized gravel base, as specified under Section 302 within 6 inches of finished grade and the remaining portion of the excavation backfilled with 3½ inches AC Stabilized Base and 2½ inches AC Surface Course.

- Replacement of the patch area shall be done in accordance with 304-6.1B AC Stabilized Base (Class B) and 401-6.2B AC Surface Course (Class B).

The asphalt pavement of streets which have an asphalt overlaying on a concrete base shall be repaired in accordance with AC Pavement Failure to a minimum depth of overlay. When the concrete base requires repair, removal shall be done in accordance with 602-4.3 Driveway Removal. Replacement of the concrete shall be done in accordance with 602-4.1 6-inch Concrete Driveway. The replacement depth shall be equal to the existing concrete pavement thickness with a minimum thickness of 4 inches.

401-5.7 COMPACTION OF MIXTURES. After spreading, the mixture shall be thoroughly and uniformly compacted with power rollers as directed by the ENGINEER. Rolling of the mixture shall begin as soon after spreading as it will bear the roller without undue displacement or hair checking. On the first strip spread, rolling shall start in the center and continue toward either edge. On subsequent strips laid, rolling shall start on the edge adjacent to previously laid material and continue toward the opposite edge.

Initial rolling shall be done longitudinally. The rollers shall overlap on successive trips. Alternate trips of the roller shall be of slightly different lengths and cross rolling shall not exceed more than one-half the width of the pavement or crowned sections. The speed of the roller shall at all times be slow to avoid displacement of the hot mixture. Any displacement occurring as a result of reversing the direction of the roller or from any other cause shall be corrected at once by rakes and fresh mixture.

Sufficient rollers shall be furnished to handle the output of the plant. Rolling shall continue until all roller marks are eliminated, the surface is of uniform texture and true to grade and cross section, and a density of at least 95 percent of the laboratory density specified in the job mix formula per Subsection 401-2.6 is obtained.

To prevent adhesion of the mixture to the roller, the wheels shall be kept properly moistened, but excessive water will not be permitted.

In areas not accessible to the roller, the mixture shall be thoroughly compacted with hot hand tampers.

Any mixtures which become loose and broken, mixed with dirt, or in any way defective prior to the application of the finish coat shall be removed and replaced with fresh hot mixture and immediately compacted to conform with the surrounding area. This shall be done at the CONTRACTOR's expense.

401-5.8 JOINTS

(a) General. The mixture at the joints shall comply with the surface requirements and present the same uniformity of texture, density, smoothness, etc., as other sections of the course. In the formation of all joints, provision shall be made for proper bond with the adjacent course for the specified depth on the course. Joints shall be formed by cutting back on the previous day's run to expose the full depth of the course. The exposed edge shall then be given a light paint coat of asphalt as required by the ENGINEER and the fresh mixture raked against the joint, thoroughly tamped with tampers and rolled.

(b) Transverse. The placing of the course shall be as continuous as possible. The roller shall pass over the unprotected end of the freshly laid mixture only when discontinuing the laying of the course.

(c) Longitudinal. The placing of the course shall be as specified and in such a manner that the joint is exposed for the shortest period possible. The joint shall be placed so that it will not coincide with that in the base, binder, or existing surface course by at least 1 foot.

401-5.9 SHAPING EDGES. While the surface is being compacted and finished, the CONTRACTOR shall carefully trim the outside edges of the pavement to the proper alignment. The edges so formed shall be beveled while still hot with the back of the rake or a smoothing iron and thoroughly compacted by tampers or by other satisfactory methods.

401-5.10 SURFACE TESTS. Tests for conformity with the specified crown and grade shall be made by the CONTRACTOR immediately after initial compression. Any variation shall be corrected by the removal or addition of materials and by continuous rolling.

The finished surface shall not vary more than 3/8 inch when tested with a 10-foot straight edge applied parallel with or at right angles to the centerline. The surface tolerance for blade laying shall be 3/8 inch in 10 feet.

After the completion of final rolling, the smoothness of the course shall again be tested; the humps or depressions exceeding the specified tolerances or that retain water on the surface shall be corrected immediately as directed by the ENGINEER; this shall be done at the CONTRACTOR's expense.

401-5.11 DENSITY AND TESTING REQUIREMENTS FOR BITUMINOUS PAVEMENTS. The CONTRACTOR shall engage an independent testing laboratory approved by the ENGINEER to test the composition of the mixtures, the mineral aggregates, and the in-place density of the mixture.

(a) Density. AC Surface Course shall be compacted to 95 percent of Marshall Density. The density of the compacted bituminous pavement shall be determined in sublots of 1,500 square yards per each lift.

Each day's haul will be considered a "lot," and each "lot" shall be divided into acceptance sublots not to exceed 1,500 square yards, unless the control strip method outlined below is used. Densities per sublot will be taken at random with a minimum of one (1) nuclear density per sublot, and the mean density in each sublot shall equal or exceed the specified density. A minimum of 10 percent of the sublots shall be cored.

Sublots for AC Patch shall not exceed 150 square yards for areas that are a minimum of 4 feet x 4 feet in size. Areas less than 4 feet x 4 feet in size, sublots shall not exceed 75 square yards. Density tests shall be required for AC Surface Course when the depth leveled is greater than 1 inch. Frequency of tests shall be one (1) per 250 tons AC Surface Course.

Densities shall be taken by a Nuclear Gauge Tester in accordance with ASTM D2950 or by the Coring Method.

Compaction methods and equipment used shall be approved by the ENGINEER.

During the course of bituminous pavement construction, it may be deemed necessary by the ENGINEER to verify pavement composition and/or the results obtained by the Nuclear Density Tester. This will be accomplished by removing suitable sized samples of the completed pavement. The CONTRACTOR shall remove the samples and replace the pavement at no extra charge. If the pavement is deficient in composition, compaction, or thickness, satisfactory correction shall be made immediately.

Should the CONTRACTOR require any of the above verification sampling, he may do so provided he agrees to assume all costs incurred including the testing of the sample.

(b) Control Strip Method. If the ENGINEER determines that through the CONTRACTOR's efforts and the test results the specified percent of Marshall Density cannot be obtained, a control strip shall be used to establish the density criteria for the particular pavement area involved.

The subbase on which the control strip is to be constructed shall be approved by the ENGINEER prior to the construction of said strip. The ENGINEER may abandon the control strip criteria or require a new control strip when a change in materials or a change in construction methods is observed.

The control strip shall be constructed with blended materials meeting specifications and approved by the ENGINEER. The control strip shall cover not less than 300 square yards at the specified pavement depth and shall remain in place as part of the completed work.

Compaction of the control strip shall begin as soon as possible after the mixture is placed. Compaction shall be uniform over the entire surface. During compaction, pavement densities will be determined by the CONTRACTOR with a portable nuclear device. When the ENGINEER determines density increases less than 1 lb. per cubic foot per roller pass, the rolling shall cease provided a minimum of three (3) roller coverages have been completed. Roller or rollers shall be approved by the ENGINEER. The mean density shall be determined by ten (10) random density tests within the control strip. The control strip density determination shall be the responsibility of the CONTRACTOR.

The remainder of the work in which the control strip is to govern shall be divided into acceptance strips containing no more than 1,500 square yards. The density of each acceptance strip shall be obtained by the results of five (5) nuclear densities, the mean density of which shall not be less than 98 percent of the control strip density accepted by the ENGINEER. No individual test shall be less than 95 percent of the control strip density.

If the mean density of the acceptance strip does not conform to the requirements stated herein, or if an individual test value does not meet the requirements stated herein, the CONTRACTOR shall continue its compactive effort until the required density is obtained.

It is intended that acceptance density testing will be accomplished while the bituminous mixture is hot enough to permit further densification if such is shown to be necessary.

After the required density has been attained in the acceptance strips, further finish rolling may be necessary to remove roller marks or other surface irregularities.

The ENGINEER reserves the right to require testing of individual areas which are apparently defective based upon visual examination and to reject any area that does not have at least 95 percent of the mean density of the control strip.

All other testing shall be in accordance with the Standard Specifications, Special Provisions contained herein, and the project plans.

(c) Testing of Aggregate and Bituminous Mixture. One (1) dry belt sample shall be taken in accordance with ASTM D75 for each increment of 1,000 tons of bituminous pavement produced with a minimum of one (1) dry belt sample taken and tested per day. The dry sample shall be tested for gradation in accordance with Section 401-3 of the Standard Specifications. One (1) dry belt sample shall be taken for each increment of 50 tons of AC Patch and one (1) for each increment of 100 tons of AC Leveling Course produced, with a minimum of one (1) dry belt sample taken and tested per day on each material produced.

A minimum of one (1) bituminous mixture sample shall be taken per day in accordance with ASTM D979 for each increment of 1,000 tons of bituminous pavement produced. The bituminous mixture shall be tested in accordance with ASTM 2041 Theoretical

Maximum Specific Gravity, ASTM 6927 Stability and Flow, ASTM 3203 Air Voids, and D6995 Voids in Mineral Aggregate (VMA). . The bituminous mixture shall also be tested to determine the bitumen content by an extraction in accordance with ASTM D2172. The gradation of the mineral aggregate shall also be determined after the extraction is made. One (1) bituminous mixture sample shall be taken for each increment of 50 tons of AC Patch and one (1) for each increment of 100 tons of AC Leveling Course.

The CONTRACTOR must keep track of daily tonnages of each material produced and a total tonnage to date quantity. This tonnage information along with the asphalt cement (cutoff) percentage must be completed on a form which can be acquired at the City of Bismarck Engineering Department, and sent to the testing laboratory before 9:00 a.m. the next day. The testing laboratory SHALL then test the material properties, fill out the remainder of the form, then forward it back to the CONTRACTOR and then to the CITY OF BISMARCK. Communication between the CONTRACTOR, testing laboratory, and the CITY is essential. The testing laboratory must be notified at least one (1) hour prior to any paving activities. If the CONTRACTOR's paving activities extend beyond 5:00 p.m., the CITY and the testing laboratory shall be notified prior to 4:00 p.m. that day, and not later than 4:00 p.m. on Friday for any anticipated work on the weekend.

Test for percent of fractured faces will be determined by the percentage of fractured faces for each dry belt sample taken.

(d) Payment and Reports. The cost of all said testing shall be considered incidental to other bid items.

The time, locations, depths, and frequency of testing shall be at the discretion of the ENGINEER during construction. Should it become necessary to require an additional number of initial tests over and above the frequency specified herein, the CITY OF BISMARCK will assume the responsibility to perform said additional testing, except as outlined herein under "Compaction."

The CONTRACTOR, however, will be required to assume the cost of all testing to determine the limits of an area not meeting specifications and subsequent retesting of said area after corrections have been completed.

Written reports of all results shall be supplied to the ENGINEER and the CONTRACTOR by the testing laboratory as soon as possible. To expedite construction progress, it is necessary that the CONTRACTOR and ENGINEER be furnished with the results of all tests as soon as testing is completed.

The availability of the independent testing laboratory when needed and speed of testing and reporting are to be considered the responsibility of the CONTRACTOR.

401-5.12 BITUMINOUS AND AGGREGATE MATERIAL CONTRACTOR'S RESPONSIBILITY. Samples of the bituminous and aggregate materials that the CONTRACTOR proposes to use, together with a statement of their source and

character, shall be submitted to the ENGINEER; approval must be obtained before the use of such material begins. The CONTRACTOR shall require the manufacturer or producer of the bituminous and aggregate materials to furnish material subject to this and all other pertinent requirements of the contract. Only those materials that have demonstrated performance under the proposed design requirements will be accepted.

The ENGINEER or his authorized representative shall have access at all times to all parts of the paving plant for the purpose of inspecting equipment, conditions, and operation of the plant for verification of weights or proportions and character of materials and to determine temperature maintained in the preparation of the mixtures.

The CONTRACTOR shall furnish vendor's certified test reports for each tanker, carload, or equivalent of bitumen shipped to the project. The report shall be delivered to the ENGINEER before permission is granted for use of the material. The furnishing of the vendor's certified test report for the bituminous material shall not be interpreted as a basis for final acceptance. All such test reports shall be subject to verification by testing samples of material received for use on the project.

401-5.13 AC TRANSVERSE CRACK LEVELING. The AC Transverse Crack Leveling is to be applied only to displaced or settled transverse cracks that require leveling. The ENGINEER will mark locations for AC transverse crack leveling. The crack leveling will be completed only after the crack sealing or filling operations are completed. The leveling course shall be applied along the entire crack (if required) with a minimum width of 2.0' or the width of the existing settlement, whichever is greater. A Bituminous Tack Coat must be applied prior to the transverse crack leveling. The material used for AC Transverse Crack Leveling shall be AC Leveling Course.

401-6 MEASUREMENT AND PAYMENT

401-6.1 AC LEVELING COURSE (CLASS). The AC Leveling Course material shall be measured by the ton of bituminous mixture and paid for at the unit price bid for "AC Leveling Course (Class)" complete in place and accepted by the ENGINEER. No deduction will be made for the weight of the asphalt cement in the mixture. Batch weights will not be permitted for method of measurement.

401-6.2 AC SURFACE COURSE (CLASS). The AC Surface Course material shall be measured by the ton of bituminous mixture and paid for at the unit price bid for "AC Surface Course (Class)" complete in place and accepted by the ENGINEER. No deduction will be made for the weight of the asphalt cement in the mixture. Batch weights will not be permitted for method of measurement.

401-6.3 AC PATCH (CLASS). The AC Patch material shall be measured by the ton of bituminous mixture and paid for at the unit price bid for "AC Patch (Class)" complete in place and accepted by the ENGINEER. No deduction will be made for the weight of the asphalt cement in the mixture. Batch weights will not be permitted for method of measurement.

401-6.4 ASPHALT CEMENT. The Asphalt Cement shall be measured by weighing which shall then be converted to gallons at 60°F based on the unit weight shown on the certified analysis report of each tanker shipped. Payment shall be made at the unit price bid per gallon (GAL) for "Asphalt Cement."

401-6.5 AC TRANSVERSE CRACK LEVELING. The AC Transverse Crack Leveling material shall be measured by the ton of bituminous mixture and paid for at the Unit Price Bid for "AC Transverse Crack Leveling" complete in place and accepted by the ENGINEER. No deduction will be made for the weight of the asphalt cement in the mixture. Batch weights will not be permitted for methods of measurements. Bituminous Tack Coat shall be paid under a separate bid item.

SECTION 402 – BITUMINOUS PRIME OR TACK COAT

402-1 DESCRIPTION

This item shall consist of supplying and applying bituminous material to a previously prepared, bonded, and/or bituminized binder, leveling, or base course or existing pavement in accordance with these specifications and to the width shown on the typical cross section on the plans.

402-2 MATERIALS

402-2.1 QUANTITY OF MATERIAL. The approximate amount of bituminous material per square yard for Prime or Tack Coat shall be as provided in the following table. The exact amount shall be as ordered by the ENGINEER.

Material	Amount
Bituminous Prime Coat	0.25 to 0.05 Gal./sq. yd.
Bituminous Tack Coat	0.05 to 0.20 Gal/sq. yd.

402-2.2 BITUMINOUS MATERIAL. The types, grades, controlling specifications, and application temperatures for the bituminous materials are shown in the following table. The specific material to be used shall be designated by Special Provision or by the ENGINEER. The supplier of the bituminous material shall supply asphalt viscosity charts for the material delivered.

PRIME COATS

Type and Grade	Specification	Application Temperature
MC-30	ASTM D2027 (MC)	85°-140°F
MC 70	ASTM D2027 (MC)	120°-175°F

TACK COATS

Type and Grade	Specification	Application Temperature
SS-1, SS-1h	ASTM D977	75°-130°F

402-3 CONSTRUCTION REQUIREMENTS

402-3.1 WEATHER LIMITATIONS FOR PRIME COAT. The prime coat shall be applied only when the existing surface is dry or contains sufficient moisture to get uniform distribution of the bituminous material when the atmospheric temperature is above 60°F and when the weather is not foggy or rainy. The temperature requirements may be waived, but only when so directed by the ENGINEER.

402-3.2 WEATHER LIMITATION FOR TACK COAT. The tack coat shall be applied only when the existing surface is dry, the weather is not foggy or rainy, and the atmospheric temperature is above 40°F. The temperature requirements may be waived, but only when so directed by the ENGINEER with the use of an approved alternate bituminous material.

402-3.3 EQUIPMENT. The equipment used by the CONTRACTOR shall include a self-powered pressure bituminous material distributor and equipment for heating bituminous material.

The distributor shall have pneumatic tires of such width and number that the load produced on the surface shall not exceed 650 pounds per inch of tire width and shall be designed, equipped, and operated so that bituminous material at even heat can be applied uniformly on variable widths of surface at readily controlled rates from 0.05 to 0.5 gallons per square yard. The material shall be applied within a pressure range from 25 to 75 pounds per square inch and with an allowable variation from any specified rate not to exceed 5 percent. Distributor equipment shall include a thermometer for reading temperatures of tank contents, a tachometer, pressure gauges, and volume measuring devices.

402-3.4 APPLICATION OF BITUMINOUS MATERIAL. Immediately before applying the tack or prime coat, the full width of surface to be treated shall be swept with a power broom to remove all loose dirt and other objectionable material.

The application of the bituminous material shall be made by means of a pressure distributor at the pressure, temperature, and in the amounts directed by the ENGINEER.

During all applications, the surfaces at adjacent structures shall be protected in such a manner as to prevent their being spattered, marred, or tacked.

Tack coat shall be applied to all cold joints including concrete edges prior to asphaltic pavement construction.

Following the application, the surface shall be allowed to cure without being distributed for such period of time as may be necessary to permit drying out and setting of the tack or prime coat. This period shall be determined by the ENGINEER. The surface shall then be maintained by the CONTRACTOR until the next course has been placed. Suitable precautions shall be taken by the CONTRACTOR to protect the surface against damage during this interval, including any sand necessary to blot up excess bituminous material.

402-3.5 BITUMINOUS MATERIAL CONTRACTOR'S RESPONSIBILITY. Samples of the bituminous material that the CONTRACTOR proposes to use, together with a statement as to its source and character, must be submitted and approved before use of such material begins. The CONTRACTOR shall require the manufacturer or producer of the bituminous material to furnish material subject to this and all other

pertinent requirements of the contract. Only satisfactory materials so demonstrated by service tests shall be acceptable.

The CONTRACTOR shall furnish vendor's certificate test reports for each carload or equivalent of bituminous material shipped to the project. The report shall be delivered to the ENGINEER before permission is granted for use of the material. The furnishing of the vendor's certified test report for the bituminous material shall not be interpreted as a basis for final acceptance. All such test reports shall be subject to verification by testing samples of material received for use on the project.

402-3.6 FREIGHT AND WEIGH BILLS. Before the final estimate is allowed, the CONTRACTOR shall file with the ENGINEER receipted bills when railroad shipments are made, and certified weight bills when materials are received in any other manner of the bituminous materials actually used in the construction covered by the contract.

Copies of the freight bills and weigh bills shall be furnished to the ENGINEER during the progress of the work.

402.4 MEASUREMENT AND PAYMENT

402-4.1 BITUMINOUS PRIME COAT. Bituminous Prime Coat shall be measured by weighing which shall then be converted to gallons at 60°F based on the unit weight shown on the certified analysis report on each car. Payment shall be made at the unit price bid per gallon (GAL) for "Bituminous Prime Coat" complete in place and accepted by the ENGINEER.

402-4.2 BITUMINOUS TACK COAT. Bituminous Tack Coat shall be measured by weighing which shall then be converted to gallons at 60°F based on the unit weight shown on the certified analysis report on each car. Payment shall be made at the unit price bid per gallon (GAL) for "Bituminous Tack Coat" complete in place and accepted by the ENGINEER.

SECTION 403 – BITUMINOUS SEAL

403-1 DESCRIPTION

This item shall consist of a bituminous surface treatment as a wearing course composed of single or multiple applications of bituminous material and aggregate cover placed on the prepared primed base or properly cured wearing surface in accordance with these specifications and shall conform to the dimensions and typical cross section shown on the plans and with lines and grades established by the ENGINEER.

403-2 MATERIALS

403-2.1 QUANTITY OF MATERIAL. The approximate amounts of bituminous material and aggregates per square yard for the bituminous seal shall be as provided in the following table. The exact amount shall be determined by the CONTRACTOR as necessary to obtain a finished product in conformity with the plans and specifications.

Material	Amount
Bituminous Material	As needed
Cover Aggregate	As needed
Blotter Sand	As needed

403-2.2 COVER AGGREGATE. This material shall consist of sound, durable particles of gravel and sand, either crushed or uncrushed or a combination of both, and shall be in accordance with the requirements for gradation shown in the following table:

Square Mesh Sieve Size	Percent by Weight Passing	Square Mesh Sieve Size	Percent by Weight Passing
SEAL AGGREGATE		BLOTTER SAND	
1/2"	100	1/2"	
3/8"	95-100	3/8"	100
No. 4	20-85	No. 4	85-100
No. 10	0-12	No. 10	
No. 16		No. 16	40-80
No. 50		No. 50	5-30
No. 100		No. 100	0-10
No. 200	0-4	No. 200	
% Shale & Rock Total Sample	8 (max)	% Shale & Rock Total Sample	8 (max)
% L.A. Abrasion Loss	40 (max)		

The aggregate shall be flushed with clear water but not so wet that free water will be draining from aggregate or truck bed before applying.

The sieve analysis will be determined by a wash screening in accordance with ASTM C136.

The CONTRACTOR shall provide results of tests from an approved testing facility of an adequate sized sample of aggregate and bituminous material as determined by the ENGINEER to be tested in accordance with ASTM 1664 for Coating and Striping of Bitumen-Aggregate Mixtures, fifteen (15) days prior to applying the seal coat.

If bituminous material is changed during construction, the CONTRACTOR shall perform another coating and stripping test prior to utilizing a different cover aggregate blend.

403-2.3 BITUMINOUS MATERIAL. The types, grades, and controlling specifications for the bituminous materials are given below. The bituminous material shall be selected from the table below.

Type and Grade	Specification
MC3000 OR 3000P	ASTM D2027
AE150	AASHTO M140 & ASTM D977
CRS-1, CRS-2~~, CRS-2P~~	ASTM D977 & D2397
CRS-2P	AASHTO M316

All bituminous materials shall meet the requirements of the latest version of the North Dakota Department of Transportation Standard Specifications for Road and Bridge Construction, Section 818. The CONTRACTOR may submit a bituminous material not contained in the above list to the ENGINEER and the ENGINEER may approve or deny the use of the proposed bituminous material.

403.3 CONSTRUCTION REQUIREMENTS

403-3.1 WEATHER LIMITATIONS. Bituminous material shall not be applied to a wet surface or during sand or dust storms.

In general, it will be the policy not to permit the application of any bituminous material when the atmospheric temperature is less than 70°F, and the CONTRACTOR must delay the application of bituminous material until the atmospheric and pavement surface conditions are satisfactory. No bituminous material shall be placed which cannot be cared for during daylight hours. Materials not placed in compliance with this section will not be paid for.

Seal coats shall not be applied after August 1 of any calendar year except by written or e-mail permission of the CITY ENGINEER.

403-3.2 EQUIPMENT AND ORGANIZATION. Each unit required in the execution of these specifications shall be under the continuous supervision of a competent superintendent thoroughly experienced in this type of work. Experienced operators will

be required on all equipment used in hauling and applying bituminous material and aggregates.

All equipment necessary to perform this work properly shall be on the project in first-class working condition before construction is permitted to start. The CONTRACTOR shall furnish, while applying the seal coat, all barricades, lights, flagmen, or other traffic control devices as necessary to protect crews, equipment, and the public from damage.

The following equipment will be the minimum required for this type of construction, and additional machinery shall be secured if in the opinion of the CONTRACTOR it is necessary to fulfill the conditions of these specifications or to complete the item within the time specified:

(a) The distributor shall have pneumatic tires of such width and number that the load produced on the pavement surface shall not exceed the legal gross vehicle weight, and it shall be designed and operated so that bituminous material at even heat may be applied uniformly on variable widths of surface at readily controlled rates from 0.05 to 2.0 gallons per square yard.

(b) The mechanical spreader shall be capable of depositing the designated amount of aggregate in a smooth, uniform layer or on the freshly deposited bitumen and in such a manner that the wheels of the equipment will not contact any bitumen which has not been covered by the aggregate. The rate of aggregate discharge shall be uniform over the full application width, and whenever necessary, cut-off plates or other approved means shall be provided to reduce the width of spread in suitable increments to meet the job requirements. The spread shall be so adjusted by individual gates over the wheel tracks to allow additional aggregate to be deposited to prevent tracking by the spreader and the trucks.

(c) The blotter sand spreader shall be capable of spreading a thin, uniform layer of sand such as a mechanical truck mounted type.

(d) The steel-wheel rollers shall be of the self-propelled tandem or three-wheel type rollers. The wheels on the rollers shall be equipped with adjustable scrapers which shall be used when necessary to clean the wheel surfaces. Rollers shall be equipped with tanks and sprinkling apparatus which shall be used to keep the wheels wet and prevent the surfacing materials from sticking.

(e) The pneumatic roller shall consist of pneumatic tires arranged in a manner to provide a satisfactory compacting unit. The roller shall have an effective rolling width of at least 60 inches and shall give a compression of at least 275 pounds per inch of tread width when fully loaded. The wheels shall be staggered on the front and rear axles to provide complete coverage of the area over which the roller travels.

The CONTRACTOR shall have a minimum of two (2) pneumatic rollers available. The rollers shall be the self-propelled type capable of starting, stopping, and reversing

direction smoothly, without jerking or backlash, and shall be equipped with positive, accurate steering control.

(f) A power broom or power blower, broom dragging equipment, and equipment for heating aggregate shall be included, when needed.

The CONTRACTOR shall supply such auxiliary equipment as needed.

Bituminous binder and aggregate shall not be spread over a greater yardage than can be rolled and finished in one day's operation.

403-3.3 APPLICATION OF BITUMINOUS MATERIAL. Bituminous material shall be applied upon the properly prepared surface at the rate and temperature selected by the CONTRACTOR using a distributor to obtain uniform distribution at all points. The yardage over which the binder is spread in advance of placing the aggregate shall be as determined by the CONTRACTOR. During all applications, the surfaces of the adjacent structures, including curbs, shall be protected in such a manner as to prevent their being splattered, marred, or damaged in any other manner. Splatters shall be removed and mars repaired at the CONTRACTOR's expense. Coverage shall be complete, uniform, and free of "Drilling" or "Streaking."

The bituminous material shall not be applied to a dusty surface. If normal sweeping methods do not remove dust, the surface shall be flushed with water incidental to this bid item. If water is taken from city hydrants, the CONTRACTOR must contact the Public Works Water Department for a hydrant meter to be installed prior to any water usage. The water usage and meter installation is charged directly to the CONTRACTOR. The CONTRACTOR must supply their own hookup to the meter and hose.

Before beginning application, building paper shall be spread over the surface, from the construction joint back, for a sufficient distance for the spray bar to begin spraying and be operating at full force when the surface to be treated is reached.

A construction joint shall be placed at the start or stop of seal operations which will be continued from or to the joint. This also includes at concrete valley gutters. After the asphalt is applied, the building paper shall be removed and disposed of by the CONTRACTOR.

Aggregates shall not be allowed to cover any appurtenances such as manhole covers, valve box covers, and valley gutters.

The spray bar shall be shut off instantaneously at each intersection joint to ensure a straight line and the full application of asphalt binder up to the joint.

A hand spray shall be used to apply asphalt binder necessary to touch up all spots missed or inaccessible by the distributor.

The longitudinal joint between the asphalt and the concrete gutter must be included when the bitumen is applied. A maximum overspray of 1 inch will be allowed on the concrete gutter. All vegetation and loose debris shall be removed from the longitudinal joint prior to the bitumen application.

The bitumen shall be applied so that when covered, transverse and longitudinal joints of successive applications will not result in ridges or depressions and will be smooth and consistent with the adjacent surface of the completed treatment.

403-3.4 APPLICATION OF AGGREGATE MATERIAL - GENERAL METHODS. The CONTRACTOR shall determine when to place the cover aggregate on the applied bituminous material. The timing of when the cover aggregate is placed on the applied bituminous material varies with the type and grade of bituminous material. The CONTRACTOR shall perform test strips and include this timing parameter. Cover aggregate shall be spread uniformly over the bituminous material with the aggregate equipment specified. Trucks spreading aggregate shall be operated backward so that the bituminous material will be covered before the truck wheels pass over it. The aggregate shall be spread in the same width of application as the bituminous material and shall not be applied in such thickness as to cause blanketing. Backspotting or sprinkling of additional aggregate material and spraying additional bituminous material over areas that show up having insufficient cover of bitumen shall be done by hand whenever necessary. Additional spreading of aggregate material shall be done by means of a broom drag or other approved method.

Power rollers shall be used immediately after the aggregate is spread. Following the rolling with the pneumatic roller, the course shall be further rollered with a steel-wheel roller to insure proper imbedding into the bitumen. The blotter sand shall be applied as necessary, and rolling shall be continued until no more aggregate material can be worked into the surface. Further brooming and rolling on the strip being placed on adjacent strips previously placed shall be done as often as necessary to keep the aggregate material uniformly distributed. These operations shall be continued until the surface is evenly covered and cured. Steel roller shall not be of such weight which crushes the aggregate particles.

Succeeding applications shall not be applied until the preceding application has set and excess aggregate has been removed. If dust, dirt, or other foreign matter accumulates on the surface between the applications, the CONTRACTOR shall be required to sweep and clean the surface as specified herein. The bituminous material and the aggregate shall be spread upon the clean and properly cured surface and handled as required. Extreme care shall be taken in all applications to avoid brooming or tracking dirt or any foreign matter on any portion of the pavement surface under construction. Traffic shall be signed for a restricted speed limit of fifteen (15) miles per hour during the rolling and for twenty-four hours (24) after the rolling has been completed. The CONTRACTOR may sign the streets for No Parking provided the City of Bismarck Traffic Engineer approved signs are placed twenty-four (24) hours or more prior to the beginning of operations. The CONTRACTOR must document daily which streets are signed and

during what time period. The CONTRACTOR must also notify the Police Department, Fire Department, and ambulance service prior to street closures.

It shall be the CONTRACTOR's responsibility to contact the Police Department about vehicles that are in violation of the forty-eight (48) hour parking.

Coordination between the CONTRACTOR and the Police Department is essential. The CONTRACTOR shall notify the Police Department at least two (2) hours before vehicles need towing, so the Police Department has adequate time to make arrangements.

No towing of vehicles shall be permitted unless authorized by the Police Department.

Signs shall be removed within twenty-four (24) hours after rolling is complete or whenever construction operations cease for more than twenty-four (24) hours except as directed by the ENGINEER. A recommended No Parking sign is on file at the Engineering Department.

A small crew and proper equipment shall be available to control bleeding of seal oil for a period of thirty (30) days after the date of application. If bleeding occurs during the maintenance period and after final sweeping, the CONTRACTOR shall control bleeding by spreading light coats of blotter sand, which will be paid for under Bid Item 403-4.3 Blotter Sand. Blotter sand shall not be applied in anticipation of bleeding, but only after bleeding actually occurs. The crew and equipment for controlling bleeding shall be available during the thirty (30) day period at all times including weekends and nights.

Alternate materials, approved by the ENGINEER, may be used as a substitute in lieu of blotter sand to control the bleeding.

All surplus aggregate shall be swept off the surface and removed prior to acceptance of the work. The removal of excess cover aggregate shall be accomplished by the CONTRACTOR using a "pickup" type of sweeper. Appurtenances such as manhole covers, valve box covers, and valley gutters shall not be covered with the bituminous seal. Any appurtenance covered shall be cleaned to the satisfaction of the ENGINEER prior to acceptance of the project.

Removal of the excess cover aggregate shall begin seven (7) days after the seal coat is applied unless a different time is approved by the ENGINEER. The cover aggregate picked up shall become the property of the CITY OF BISMARCK and shall be stockpiled by the end of each work day. Arterial roadways may require sweeping or removal of excess aggregate prior to seven (7) days after application as directed by the ENGINEER. The CONTRACTOR's responsibility for adherence of an acceptable amount of the aggregate in the bituminous material shall not be waived at any time. The stockpile site for excess aggregate shall be at the CITY OF BISMARCK Solid Waste Facility located adjacent to the Bismarck Police Impound building on 52nd Street, north of Divide Avenue.

403-3.5 CORRECTION OF DEFECTS. Any defects, such as raveling, low centers, lack of uniformity, or other imperfections shall be corrected to the satisfaction of the ENGINEER.

All defective materials resulting from overheating, improper handling, or application shall be removed by the CONTRACTOR and replaced with approved materials as provided for in these specifications.

Damage by a third party such as vehicle tracking or skidding after the seal coat has been applied and appropriate traffic control measures, including flag persons, are in place shall be corrected to the satisfaction of the ENGINEER at the cost of the CITY. All replacement sealing must be done by August 15 of any calendar year except by written permission by the ENGINEER. The replacement of Bituminous Seal Coat damaged by a third party shall be measured in place and paid for by the square yard at double the unit price bid for “Bituminous Seal Coat.”

403-3.6 BITUMINOUS MATERIAL CONTRACTOR'S RESPONSIBILITY. Samples of the bituminous materials that the CONTRACTOR proposes to use, together with a statement as to their source and character, shall be submitted to the ENGINEER.

The CONTRACTOR shall furnish vendor's certified test reports for each carload, or equivalent, of bitumen shipped to the project. The report shall be delivered to the ENGINEER before permission is granted for use of the material. The furnishing of the vendor's certified test report for the bituminous material shall not be interpreted as a basis for final acceptance nor shall it relieve the CONTRACTOR from responsibility for any failures in the project. All such test reports shall be subject to verification by sample testing. The CONTRACTOR shall provide tests, per the appropriate ASHTO and/or ASTM section for bituminous material for each ten thousand (10,000) gallon lot or portion of lot supplied for the project. Tests shall be by an approved independent testing facility. The CONTRACTOR shall provide aggregate gradations for each type of aggregate provided for each five hundred (500) ton lot or portion of lot provided for the project. Tests shall be performed by an approved independent testing facility.

403-3.7 TEST SECTION. The CONTRACTOR shall determine a suitable sized area within the project to use to calibrate the equipment and determine the best method of rolling. It shall be anticipated to have some delays in the operation at this point to evaluate the results. There shall be no additional compensation for these delays.

403-3.8 ACCEPTANCE OF SEAL COAT - WARRANTY. The CONTRACTOR warrants a completed seal coat project that complies with the specifications and that remains in place and performs as intended at the time of acceptance and during the one-year warranty period. Compliance with these specifications and/or acceptance of the completed bituminous seal coat for final payment as being constructed in accordance with these specifications does not relieve the CONTRACTOR from the responsibility to repair any portions where the bituminous seal coat has failed or not remained in place during the term of the contract and its one-year warranty period. The warranty provided by the CONTRACTOR shall be a “performance warranty” and shall

guarantee a completed project in accordance with the plans and specifications at the time of acceptance and final payment and for one year after the time of acceptance and final payment. The CONTRACTOR shall provide this warranty regardless of fault or the cause of such failure except for damage caused by a third party through no fault of the CONTRACTOR. The ENGINEER's representative and a representative of the CONTRACTOR shall review this project prior to the one (1) year warranty period expiration and determine any areas to be repaired. Acceptance of the project shall be deemed to be "final" at the expiration of the warranty period.

403.4 MEASUREMENT AND PAYMENT

403-4.1 BITUMINOUS SEAL COAT. Bituminous material and cover aggregate shall be measured and paid by the square yard (SY) as "403-4.1 Bituminous Seal Coat" or "403-4.1a Polymer Seal Coat" complete in place and accepted by the ENGINEER.

403-4.2 BLOTTER SAND. Blotter sand shall be measured by the ton and paid for at the unit price bid for "Blotter Sand" complete in place and accepted by the ENGINEER.

SECTION 404 – MILLING PAVEMENT SURFACE

404-1 DESCRIPTION

This work consists of improving the profile, cross slope, and surface texture of an existing pavement surface.

404-2 EQUIPMENT

The equipment for milling and texturing the pavement shall be a power operated, self-propelled planning machine or grinder capable of removing pavement surface to the required depth, profile, cross slope, and surface texture. The machine shall be capable of accurately establishing profile grades by reference to the existing pavement or from an independent grade control, and shall positively control the cross slope. The machine shall be of size, shape, and dimensions which do not interfere with safe traffic passage adjacent to the work. The milling head shall have a minimum width of 8 feet. The machine shall have a control system to automatically control the elevation and transverse slope of the milling head. A 15-foot minimum length skid, rolling straight edge, or other approved device shall be used to establish the grade reference for control of the milling head. The system shall permit the grade preference device to operate on either side of the milling machine and shall maintain the desired transverse slope regardless of changes in the elevation of the milling head.

Conveyors capable of side, read, or rear on front loading shall be provided with the necessary equipment to transfer the milled material from the roadway to a truck.

404-3 CONSTRUCTION REQUIREMENTS

The milling shall be started at the centerline of the pavement and proceed on a longitudinal line parallel to the centerline. Succeeding passes shall progress toward the outer edge of the pavement unless a different sequence of operation is permitted by the ENGINEER. The CONTRACTOR shall make every effort to complete the milling operations on the full width of each street so that it is open to traffic at the end of each day, unless otherwise approved by the ENGINEER. The milled depth shall be gradually tapered to the original pavement surface prior to opening to traffic. Before overlaying, the gradual taper to the original pavement surface shall be milled out transversely to produce a vertical cut.

The completed milled surface shall be free from transverse and longitudinal irregularities exceeding 1/4 inch when measured with a 10-foot straightedge.

In areas that have existing detector loops or micro probes, these loops or probes may be damaged or removed by the milling operations.

The CONTRACTOR shall clean the milled surface by brooming and remove all equipment and materials prior to opening to traffic.

The CONTRACTOR shall salvage the milled material for the CITY and stockpile as indicated on the plans. All equipment necessary for stockpiling milling material will be furnished by the CONTRACTOR.

Machine exhaust shall not damage or scorch any parts of trees.

The CONTRACTOR shall mill around appurtenances such as manhole and valve box castings without removing those appurtenances. If any asphalt remains on the face of the exposed curb and gutter section or radii around appurtenances, it must be removed to a depth of the milled surface. Appurtenances in the driving lanes shall be wedged with asphalt millings which shall be removed prior to the overlay. Appurtenances not wedged shall be marked with a Type II barricade. The measurement and payment will be in conjunction with the milling pavement surfacing.

404-4 MEASUREMENT AND PAYMENT

404-4.1 MILLING PAVEMENT SURFACE. Milling Pavement Surface shall be measured to the nearest 0.1 ton of material weighed and placed in an approved stockpile complete, in place and accepted by the ENGINEER. Loading, hauling, and stockpiling will not be measured and will be considered incidental to "Milling Pavement Surface." The labor, equipment, brooming, and cleaning before and after milling, water used in milling, and deposit of the milled material in a hauling unit will not be measured for payment, but will be considered incidental to "Milling Pavement Surface."

SECTION 405 CRACK TREATMENTS

405-1 DESCRIPTION

This work shall consist of applying a crack sealant material into or above existing cracks to prevent the intrusion of water and incompressible material into the cracks and to reinforce the adjacent pavement. There are two methods of crack treatments, crack sealing and crack filling. The ENGINEER shall determine which cracks are candidates for which method of crack treatment.

405-2 METHODS

405-2.1 CRACK SEALING. This method of crack treatment shall be utilized when the crack shows significant signs of vertical or horizontal movement, where crack edges may exhibit edge deterioration or displacement.

405-2.2 CRACK FILLING. This method of crack treatment shall be utilized when the crack shows very little sign of vertical or horizontal movement.

405-3 MATERIALS

The types of materials essentially comprise three material groups according to their composition and manufacturing process. The principal material groups and types are as follows:

1. Cold-applied thermoplastic bituminous materials.

    a. Liquid asphalt (emulsion).

    b. Polymer-modified liquid asphalt.

2. Hot-applied thermoplastic bituminous materials.

    a. Asphalt cement.

    b. Fiberized asphalt.

    c. Rubberized asphalt.

    d. Low-modulus rubberized asphalt.

3. Chemically cured thermosetting materials.

    a. Self-leveling silicone.

Asphalt cutbacks, mineral-filled asphalts, and sand-asphalt mixtures will not be accepted.

The following table shows the material types that possess most of the above properties. It also shows the recommended application methods and requirements for each type of material used.

Material Type	Applicable Specifications	Recommended Application
Asphalt Emulsion	ASTM[b] D977, AASHTO[c] M140, ASTM D2397, AASHTO M208	Filling
Asphalt Cement	ASTM D3381, AASHTO M20, AASHTO M226	Filling
Fiberized Asphalt	Manufacturer's recommended specs	Filling
Polymer-Modified Emulsion	ASTM D977, AASHTO M140, ASTM D2397, AASHTO M208	Filling
Asphalt Rubber	State specs, ASTM D5078	Sealing
Rubberized Asphalt	ASTM D1190, AASHTO M173, Fed SS-S-164	Sealing
	ASTM D3405, AASHTO M302, Fed SS-S-1401	Sealing
Low-Modulus Rubberized Asphalt	State-modified ASTM D3405 specs	Sealing
Self-Leveling Silicone	ASTM D5893	Sealing

A. Emulsion and Asphalt Cement Sealants. This material shall be placed flush in an unrouted, non-working crack.

B. Rubberized Asphalt Sealants. This material shall be placed flush or overbanded in routed, working cracks.

C. Self-Leveling Silicone Sealants. This material shall be placed recessed in routed working cracks.

D. Fiberized Asphalt Sealants. This material shall be placed overbanded in unrouted working cracks.

405-4 PLACEMENT CONFIGURATION

Sealant and filler materials can be placed in numerous configurations. These placement configurations are grouped into four categories.

1. Flush Fill. This configuration places the material into the existing unrouted crack and the excess material is struck off. Standard Detail No. 400-2 (A) illustrates the flush fill method.

2. Reservoir. This configuration places the material only within the confines of the routed crack. The material placed is either flush with or slightly below the pavement surface. Standard Detail No. 400-2 (C) & (E) illustrate the reservoir-type method.

3. Overband. This configuration places the material into and over an unrouted crack. The excess material shall then be squeegeed to straddle the crack to a minimum width of 1 1/2 inches on either side. Standard Detail No. 400-2 (B) illustrates the overband method.

4. Combination (Reservoir and Overband). This configuration places the material into and over a routed crack. The excess material shall then be squeegeed to straddle the crack to a minimum width of 1 1/2 inches on either side. Standard Detail No. 400-2 (D) & (F) illustrate the combination method.

5. Bond Breaker Material. If the crack continues below the routed crack, a bond breaker material, nonabsorbent closed cell, such as polyethylene foam backer rod, shall be placed at the reservoir bottom of a working crack prior to the sealant application. The backer rod prevents the sealant material from running down into the crack during application. The backer rod material must be a minimum of 25 percent wider than the width of the crack reservoir for it to maintain its vertical position and to provide shape for the material. Standard Detail No. 400-2 (E) & (F) illustrate the placement of the backer rod material.

6. Routed/Sawn Cracks. Working cracks that are relatively straight and are accompanied by edge deterioration are candidates for crack cutting. Crack cutting shall be performed in such a manner so as not to create any additional damage to the existing pavement. High-production machines that follow cracks well and produce minimal spalls or fractures shall be equipped with controls for varying the depth of the cut and the width settings. Standard Detail No. 400-2 (C) through (F) illustrate crack cutting dimensions.

405-5 MATERIAL REQUIREMENTS

The crack sealant compound shall be packaged in sealed containers. Each container shall be clearly marked with the name of the manufacturer, the trade name of the sealant, the type of sealant, the weight, the manufacturer's batch and lot number, the pouring temperature, and the safe heating temperature.

Prior approval of any specific sealant material shall be required before it can be used on the Project.

A copy of the manufacturer's recommendations pertaining to the heating and application of the joint sealant material shall be submitted to the ENGINEER before the commencement of work. These recommendations shall be adhered to and followed by the CONTRACTOR. The temperature of the sealer in the field application equipment

shall not exceed the safe heating temperature recommended by the manufacturer. Any given quantity of material shall not be heated at the pouring temperature for more than six hours and shall never be reheated. Material shall not be placed if the temperature is below the manufacturer's recommended minimum application temperature.

Mixing of different manufacturer's brands or different types of sealant shall be prohibited.

Sealant materials may be placed during a period of rising temperature after the air temperature in the shade and away from artificial heat has reached 40°F and indications are for a continued rise in temperature. During a period of falling temperature, the placement of sealant material shall be suspended when the air temperature, in the shade and away from artificial heat, reaches 40°F. Sealants shall not be placed when the weather or roadbed conditions are unfavorable.

405-6 CRACK TREATMENT PROCEDURES AND EQUIPMENT

The following table shows the required crack treatment equipment characteristics and recommendations.

Operation	Type of Equipment	Recommendations
Crack Cutting (if required)	Vertical-Spindle Router	Use only with sharp carbide-tipped or diamond router bits.
	Rotary-Impact Router	Use only with sharp carbide-tipped router bits.
	Random Crack Saw	Use only on fairly straight cracks. Diamond blade saw, 200-mm maximum diameter.
Crack Cleaning/ Drying	Blowers (Backpack & Power-Driven)	**Not recommended**–Insufficient blast velocity (60 to 100 m/s).
	Air Compressor	Equipped with oil and moisture filters. Pressure–690 kPa minimum. Flow–0.07 m^3/s minimum. Velocity–990 m/s minimum.
	Hot-Air Lance	Velocity–610 m/s minimum. Temperature–1370°C minimum. No direct flame on pavement. Highly Recommended

		Velocity–915 m/s minimum. Temperature–1650°C minimum.
	Sandblaster	Acceptable air compressor (minimum 690 kPa pressure and 0.07 m^3/s flow). Minimum 25-mm-inside-diameter lines and 6-mm-diameter nozzle.
	Wirebrush	Do not use with worn brushes. Not recommended for cleaning previously treated cracks, as there is a tendency to smear material.
Material Installation	Pour Pots	Not recommended for production operations.
	Asphalt Distributor	Not suitable for fiber- or rubber-modified asphalt materials.
	Melter-Applicator	Direct-heat kettles not suitable for fiber- or rubber-modified asphalt materials. Indirect-heat kettles should be equipped with: * Double-boiler, mechanical agitator with separate automatic temperature controls for oil and melting chamber. * Sealant heating range to 230°C. * Full-sweep agitator. * Accurately calibrated material and heating oil temperature gauges.
	Backer Rod Installation Tools	Maintains proper recess. Does not damage backer rod.
	Silicone Pump & Applicator	Flow Rate–0.25 L/s minimum. Hose line with Teflon; all seals and packing made from Teflon
Material Finishing	Squeegee	Heavy-duty, industrial U- or V-shaped.
Blotting (if required)	Paper Wand	To prevent tracking.

If tracking of the sealant is present, blotting or tissuing will be required. Blotting may consist of sand limestone dust or crusher dust placed directly on top of the treatment material.

405-7 TRAFFIC CONTROL PLAN AND QUALITY OF DEVICES

The CONTRACTOR shall be responsible for all traffic control devices needed for the completion of the crack treatment operation.

Traffic Control Devices used on the project will be rated according to the American Traffic Safety Services Association's (ATSSA) **Quality Standards for Work Zone Traffic Control Devices**. The definitions of "acceptable," "marginal," and "unacceptable" and the evaluation guidelines shall be defined in ATSSA's **Quality Standards for Work Zone Traffic Control Devices**.

All traffic control devices shall be retroreflective.
An approved traffic control plan shall be submitted three days prior to its use.
Traffic control plan and devices shall be considered incidental to other bid items.
The CONTRACTOR shall broom off the excess debris and remove the traffic control devices after the crack treatment operations are completed.

405-8 MEASUREMENT AND PAYMENT

405-8.1 EMULSION AND ASPHALT CEMENT SEALANTS. The emulsion and asphalt cement sealants shall be measured by the linear foot (LF) and paid for at the unit price for "Emulsion and Asphalt Cement Sealants" complete in place and accepted by the ENGINEER.

405-8.2 RUBBERIZED ASPHALT SEALANTS. The rubberized asphalt sealants shall be measured by the linear foot (LF) and paid for at the unit price for "Rubberized Asphalt Sealants" complete in place and accepted by the ENGINEER.

405-8.3 SELF-LEVELING SILICONE SEALANTS. The self-leveling silicone sealants shall be measured by the linear foot (LF) and paid for at the unit price for "Self-Leveling Silicone Sealants" complete in place and accepted by the ENGINEER.

405-8.4 FIBERIZED ASPHALT SEALANTS. The fiberized asphalt sealants shall be measured by the linear foot (LF) and paid for at the unit price for "Fiberized Asphalt Sealants" complete in place and accepted by the ENGINEER.

405-8.5 BOND BREAKER MATERIAL. Bond Breaker Material shall be measured by the linear foot (LF) and paid for at the unit price for "Bond Breaker Material" complete in place and accepted by the ENGINEER.

405-8.6 ROUTED/SAWN CRACKS. The Routed/Sawn Cracks shall be measured by the linear foot (LF) and paid for at the unit price for "Routed/Sawn Cracks" complete in place and accepted by the ENGINEER.

SECTION 406 – ASPHALT REMOVAL

406-1 DESCRIPTION

This work consists of removing, and disposing of, existing AC pavement surfacing.

406-2 EQUIPMENT

The CONTRACTOR shall use a saw, milling wheel, or asphalt cutting wheel to make all pavement cuts. The CONTRACTOR shall furnish all equipment for cutting, removing, loading, and hauling removed asphalt to the designated unloading site.

406-3 CONSTRUCTION REQUIREMENTS

All asphalt cuts shall be made to maintain a vertical face on the remaining asphalt which shall be maintained until the pavement is replaced and accepted by the ENGINEER. Pavement cuts shall be as designated on plans or as marked by the ENGINEER. Any removal and replacement beyond the area specified on plans or marked by the ENGINEER shall be the responsibility of the CONTRACTOR to replace.

Pavement removed shall be salvaged as clean as practical, delivered to the "City of Bismarck Municipal Solid Waste Facility" located east of 52nd Street and north of Divide Avenue, and stockpiled in large piles and shall be considered incidental to the price bid for "Pavement Removal." Landfill fees shall be waived for clean asphalt.

Protection of adjacent pavements shall be the responsibility of the CONTRACTOR. A mutual inspection of the surrounding pavements shall be made and any damages shall be repaired by the CONTRACTOR at no additional cost.

406-4 MEASUREMENT AND PAYMENT

406-4.1 ASPHALT REMOVAL. Asphalt Removal shall be measured and paid by the square yard (SY) complete, disposed of properly, and accepted by the ENGINEER. Replacement shall not be part of this bid item.

SECTION 500

RIGID PAVEMENT

SECTION 501 - PORTLAND CEMENT CONCRETE PAVEMENT

501-1 DESCRIPTION

This work shall consist of a pavement composed of air-entrained Portland Cement Concrete, with or without reinforcement as specified, constructed on a prepared subgrade or base course in accordance with these specifications, and in conformity with the lines, grades, thicknesses, and typical cross sections shown on the plans or established by the ENGINEER.

501-2 MATERIALS

501-2.1 GENERAL. Prior to construction, CONTRACTOR shall submit for approval by the ENGINEER a Certified Analysis of materials listed in Subsections 501-2.2, 501-2.2(a), 501-2.7, 501-2.8, 501-2.9, and 501-2.13.

501-2.2 PORTLAND CEMENT. The cement used in the work shall be air entrained Portland Cement, Type 1A, meeting the requirements of ASTM C150 or Portland Cement, Type 1, meeting the requirements of ASTM C150 with admixtures for producing air entrainment meeting the requirements of ASTM C260.

501-2.2a FLY ASH. The CONTRACTOR shall have the option of substituting fly ash for Portland Cement in the concrete mixture up to a maximum of 20 percent by weight. Each source of fly ash shall be approved by the ENGINEER prior to use. Fly ash shall conform to the requirements of ASTM C311, ASTM C618, and ASTM C684, Class C fly ash. The ASTM C618, Class C fly ash chemical and physical specifications shall be as follows:

Chemical Requirements

Silicon dioxide (SiO_2) plus aluminum oxide (Al_2O_3) plus iron oxide (Fe_2O_3), min %	50.0
Sulfur Trioxide (SO_3), max %	5.0
Moisture content, max %	3.0
Loss on ignition, max %	6.0

Supplementary Optional Chemical Requirement

Available alkalies, as Na_2O, max %	1.5

Physical Requirements

Fineness:	
Amount retained with wet-sieve (No. 325 sieve), max %	34.0
Pozzolanic activity index:	
With Portland Cement, at 28 days, min, percent of control	75.0
Water requirement, max %	105.0
Soundness:	
Autoclave expansion or contraction, max %	0.8
Uniformity requirements:	
The specific gravity and fineness of individual samples shall not vary from the average established by the 10 preceding tests, or by all preceding tests if the number is less than 10, by more than:	
Specific gravity, max variation from average, %	5.0
Percent retained on (No. 325) Wet Sieve, max variation from average	5.0

Supplementary Optional Physical Requirements

Increase of drying shrinkage of mortar bars at 28 days, max %	0.03
Uniformity Requirements:	
In addition when air-entraining concrete is specified, the quantity of air-entraining agent required to produce an air content of 18.0 Vol % of mortar shall not vary from the average established by the 10 preceding test or by all preceding tests if less than 10, by more than, %	20.0
Reactivity with Cement Alkalies:	
Mortar Expansion at 14 days, max %	0.020

Fly ash that fails to meet the requirement of the tests shall not be used unless specified otherwise by the ENGINEER.

A complete chemical and physical analysis must be submitted to the CITY OF BISMARCK's Engineering Department for approval 14 days prior to use. Also a recent complete chemical and physical analysis must be submitted each month during its use after approval.

A test result of loss on ignition and amount retained on No. 325 Wet Sieve must accompany each truckload of fly ash (25 tons or less), and these results must be on file at the ready mix producer's office. Random checks and samples shall be taken to

insure testing accuracy. Any extensive error in test results could cause the material's use to be discontinued.

No fly ash will be allowed which contains oil residue or chemical pollution control contaminates.

Each source of fly ash shall be approved by the ENGINEER prior to use. If more then one source of fly ash is used on a project, each shall be stored and used separately.

Fly ash shall not be substituted for Portland Cement on any work after October 1 of any calendar year, unless requested by the CONTRACTOR and approved by the CITY ENGINEER.

The ENGINEER shall have the right to sample and test the fly ash as deemed necessary during the course of the construction season. The fly ash shall be tested in accordance with ASTM C311.

501-2.3 AGGREGATE. The CONTRACTOR shall notify the ENGINEER of the source of the coarse and fine aggregate which is proposed for use on the contract. Sufficient time shall be allowed so that sampling and testing can be completed prior to the beginning of construction. During the construction period, the CONTRACTOR shall at all times make available to the ENGINEER the sampling of aggregate. All aggregate shall meet the requirements of these specifications.

501-2.4 COARSE AGGREGATE. Except as noted herein, the coarse aggregate used shall conform to the requirements of ASTM C33, Class 4M. Coarse aggregate shall consist of gravel or broken stone composed of strong, hard, durable, uncoated pebbles or rock fragments washed clean and free from injurious amounts of shale, coal, clay lumps, soft fragments, dirt, glass, organic, or any other deleterious substances.

Coarse aggregate shall be graded from coarse to fine within one of the following limits when tested in conformity with ASTM C136. Either gradation may be used, but once adopted, no change in gradation will be made during course of the work.

COARSE AGGREGATE SIZE

Square Mesh	Percent by Weight Passing	Percent by Weight Passing
2"		
1½"	100	
1"	95-100	100
3/4"		90-100
1/2”	25-60	
3/8”		20-55
No. 4	0-10	0-10
No. 8	0-5	0-5
No. 200	0-1	0-1

501-2.5 FINE AGGREGATE. Except as noted herein, the fine aggregate shall conform to the requirements of ASTM C33. Fine aggregate shall be natural sand, consisting of hard, strong, sharp, uncoated grains, free of dust, lumps, mica, shale, organic matter, or other deleterious substances.

Fine aggregate shall be graded within the following limits when tested in conformity with ASTM C136.

FINE AGGREGATE SIZE

SQUARE MESH SIEVE SIZE	PERCENT BY WEIGHT PASSING	SQUARE MESH SIEVE SIZE	PERCENT BY WEIGHT PASSING
MORTAR SAND		CONCRETE SAND	
No. 4	100	3/8”	100
No. 8	95-100	No. 4	95-100
		No. 8	80-100
		No. 16	50-85
		No. 30	25-60
		No. 50	5-30
No. 100	25 (max.)	No. 100	0-10
No. 200	10 (max.)		

The quality, sampling, and testing of mortar sand for use in cement mortar shall conform to ASTM C144.

501-2.6 WATER. Water used in mixing concrete shall be clean and shall not contain deleterious amounts of acids, alkalies, or organic materials. Water shall be subject to test and approval by the ENGINEER.

501-2.7 ADMIXTURES. Substances other than cement, water, aggregates, and air-entraining agents shall not be used in the concrete except as otherwise required or when permitted in writing by the ENGINEER. Air-Entraining Admixtures shall conform to ASTM C260. Unless otherwise provided in the Plans or Special Provisions, no reduction will be made in the specified cement content of the concrete mixture by reason of using any admixtures. Admixtures containing calcium chloride must be preapproved and conform to ASTM D98. No admixture shall be used which interferes with proper control of the entrained air content of concrete. Permission to use any admixtures may be withdrawn at any time if the properties of the admixture are not uniform or if satisfactory results are not being obtained.

Should the CONTRACTOR request and obtain permission to use admixtures for its own benefit, no additional compensation will be allowed for the cost of furnishing the admixtures and incorporating them into the concrete mixture.

Should the ENGINEER direct the CONTRACTOR to use admixtures when their use is not required by these Specifications or by the Plans or Special Provisions, furnishing the

admixtures and incorporating them into the concrete mixture will be paid for as extra work as provided in Section 126.

501-2.8 EXPANSION JOINT MATERIAL. Premolded Bituminous Fiber Expansion Joint Material shall be used in expansion joints and shall consist of preformed strips of one continuous piece per joint which have been formed from cane or other suitable fibers of cellular nature securely bound together and uniformly impregnated with a suitable asphaltic binder. Said joint materials shall conform to ASTM D1751 (premolded material). Closed cell polyethylene expansion joint filler shall conform to ASTM D1056. Vinyl expansion joints shall be ProFlex from Oscada Plastics, Inc. or approved equal and shall conform to ASTM D1752. The cost for all expansion joint material shall be considered incidental.

501-2.9 JOINT SEALING MATERIAL. Joint sealing material shall conform to the following:

Type of Sealant	ASTM or NDDOT Specification
Hot-poured, elastic	D1190
Hot-poured, polymeric asphalt based	D3405 or NDDOT 826.02A Type 2
Hot-poured, elastomeric	D3406
Cold applied elastomeric	C920
Preformed polychloroprene elastomeric	D2628 (6 celled)
Silicone sealant	D5893 or NDDOT 826.02B Type 5

The cost for joint sealing shall be considered incidental.

501-2.10 REINFORCEMENT AND BAR STEEL. Reinforcing steel, except as otherwise specified, shall be grade 60 deformed bars rolled from take out billet stock and shall conform to the requirements of ASTM A615.

Dowel bars shall be intermediate grade plain bars rolled from take out billet stock and shall conform to the requirements of ASTM A663 or A675.

Wire mesh reinforcement shall comply with the requirements of ASTM A185.

Bar supports and spacers shall be constructed of steel and of suitable design and strength to hold reinforcement accurately in place before and during the placing of concrete. Hy-chairs shall be of welded steel construction, and all spacers, bar supports and chairs shall be approved by the ENGINEER. The cost for all Reinforcement Steel shall be considered incidental.

Tie wire shall be No. 16 gauge annealed wire.

501-2.11 SLABJACKING MATERIALS. Slabjacking materials shall consist of Portland Cement, sand-free loam topsoil, powder limestone, or lime sludge, which shall become fluid like when mixed with water.

A preferred mixture is lime sludge or powder limestone. Powder limestone shall contain a minimum of 90% calcium and magnesium carbonates, grated so that 100% pass a 60 mesh screen, 85% pass a 100 mesh screen, and 60% pass a 200 mesh screen. Portland Cement shall contain about a 5:1 ratio of limestone to cement. Topsoil shall be a good loam soil relatively free of sand, clay, pebbles, and roots.

Material shall be the consistency of a thick cream that tends to flow freely and fill all voids and openings, yet should have a sufficient internal resistance (stiffness) that the amount of lift may be controlled.

Cement content may vary with each individual application; some jobs may only contain 5% cement, others as much as 15%. A high cement content mix may be used when it is desirable to have the mix set up quickly.

501-2.12 SELECT BACKFILL. The material furnished under this item shall be bedding material in accordance with Section 801-2.9 or recycled concrete "readywash" type material and shall be mechanically tamped in place in layers not exceeding 6 inches in depth.

501-2.13 CURING COMPOUNDS. Curing compounds shall conform to ASTM C309, Type 2 white pigmented or AASHTO M148 Type 1.

501-3 CONSTRUCTION REQUIREMENTS

501-3.1 GENERAL. The CONTRACTOR shall furnish all labor, materials, and services necessary for and incidental to the completion of all work as shown on the drawings and specified herein. All machinery and equipment owned or controlled by the CONTRACTOR shall be of sufficient size to meet the requirements of the work and shall produce satisfactory work. All work shall be subject to the inspection and approval of the ENGINEER. The CONTRACTOR shall employ at all times a sufficient force of workmen of such experience and ability that the work can be completed in a satisfactory and workmanlike manner.

Identify an acceptable concrete wash out area(s). Dumping concrete or concrete waste within the CITY's right-of-way or easements including the storm water system or on adjacent properties is prohibited without the written consent of the CITY or the affected property owner.

501-3.2 MATERIALS STORAGE

(a) Portland Cement. Portland Cement shall be stored as specified in ASTM C150. The Portland Cement shall be stored in such a manner as to permit easy access for proper inspection and identification of each shipment and in a suitable weather tight building that will protect the Portland Cement from becoming damp and minimize warehouse set. Storage shall be of such capacity to provide ample space for consignments of cement as may be required to carry on the work in accordance with approved progress schedules.

(b) Aggregates. Aggregates shall be stored in such a manner as to afford good drainage, prevent the intrusion of foreign matter, and preserve the gradation. Any material which has deteriorated or which has been damaged shall not be used for concrete.

To avoid changes in consistency, the aggregates shall be obtained from a source which will insure uniform quality and grading during any single day's operation, and they shall be delivered to the work and handled in such manner that variations in moisture content will not interfere with the steady production of concrete of uniform quality and consistency.

(c) Fly Ash. Fly ash shall be stored in weather tight facilities to be approved by the ENGINEER.

501-3.3 ADVANCE DESIGN OF CONCRETE MIXES. Designs and tests for each concrete mix to be used under this contract shall be made using aggregates which have been approved for this work. Except as otherwise specified, mixes shall be designed in accordance with ACI 613 to attain the required strengths using the various slumps (including the maximum allowable), the various size aggregates expected to be used in the work and the admixtures as called for by the ENGINEER. The concrete mixes shall be designed by an independent testing laboratory and shall be incidental to other items.

Advance tests of each of the proposed mixes shall be made in accordance with ASTM C192. Six (6) standard 6-inch diameter compression test cylinders shall be made for each mix design, three (3) shall be tested at seven (7) days and three (3) at twenty-eight (28) days. The 7-bag mix design shall have nine (9) standard 6-inch diameter compression test cylinders. Three (3) shall be tested at 3 days, three (3) shall be tested at 7 days, and three (3) shall be tested at 28 days. Concrete tested shall contain all required and/or proposed admixtures and in addition to the testing required by ASTM C192 shall be tested for air content by ASTM C231.

The advance mix designs and the results of tests on cylinders made from advance mix designs is required before work of concrete placing is started. Tests for aggregates as required in Subsection 501-2.4 may be made a part of these tests if suitably referenced on the reports which shall be issued at seven (7) and twenty-eight (28) days.

The above tests shall be repeated if necessary because of changes in materials or unsatisfactory results. The mix design and the advance testing of aggregates specification may be waived at the request of the CONTRACTOR and with the ENGINEER’s approval if a mix design approved by the CITY OF BISMARCK is being produced by an established ready mix plant with suitable records of mixes and testing, and if the plant certifies that it will continue to use the same materials involved in the recorded testing. The CONTRACTOR shall pay for all advance design and testing as required per 501-3.3 including tests for aggregates and flexural strength.

501-3.4 FIELD QUALITY CONTROL. The CONTRACTOR shall engage an independent testing laboratory approved by the ENGINEER to test consistency, proportioning, and strength of the concrete mixture. The CONTRACTOR shall be responsible for scheduling the testing firm. The time and location of testing shall be at the discretion of the ENGINEER. The independent testing laboratory personnel testing in the field shall be responsible for notifying the CONTRACTOR and the ENGINEER in the field immediately of failures. If any test have not met the specifications, testing shall continue on all batches until the specific ranges have been met and the limits of the area not meeting the requirements is established.

The cost of testing, including retesting of failed tests, shall be considered incidental. All tests requested by the ENGINEER, other than frequencies specified below, shall be considered extra items.

For construction of new concrete pavements, tests shall be taken for each 75 cubic yards (CY).

For new and repaired driveways or sidewalks, tests shall be taken ever 60 cubic yards (CY), and no less than 2 per week or less than 60 cubic yards (CY) utilized.

For new and repaired valley gutters, tests shall be taken for each new valley gutter constructed or a valley gutter repaired in place..

The concrete test shall be taken for each 150 cubic yards of concrete pavement repair material placed.

One concrete test shall be taken for each 200 linear feet (LF) of repaired curb and gutter placed, not to include through the driveway.

Where less than 1,000 linear feet (LF) of new curb and gutter is placed, one concrete test shall be taken for each side of the street.

Where more than 1,000 linear feet (LF) new curb and gutter is placed, one test shall be taken for each 1,000 LF of new curb and gutter placed on each side of the street.

A set of three standard diameter compression test cylinders shall be cast in the field in accordance with ASTM C31 and C172 for each sample taken. The cylinders cast from the given 6-bag mixtures sample shall be tested in the laboratory, one at 7 days and the remaining two at 28 days with the required minimum strength of the concrete being 3,500 lbs./sq. in. at 28 days. Seven-bag mixtures shall be tested in the laboratory, one at 3 days, one at 7 days, and the remaining one at 28 days. One additional test cylinder shall be taken during cold weather construction as defined in Section 501-3.7. This cylinder shall be cured on the job site under the same conditions as the concrete it represents and tested in the laboratory after 28 days. Each sample taken or cylinders shall also be tested for slump in accordance with ASTM C143 and air content in accordance with ASTM C231. The maximum allowance slump of the concrete mixture shall be 4 inches unless otherwise approved by the ENGINEER. The air content shall

fall within the range of 5 percent to 7 percent. Concrete test specimens for flexural strength shall be made at the discretion of the ENGINEER according to ASTM C31. Concrete beams may be tested for minimum flexural strength of 590 psi according to ASTM C78. Flexural strength testing shall be considered extra to other bid items. Concrete not meeting required specifications for slump or air content during placement may be accepted or rejected at the discretion of the ENGINEER.

Written reports of all tests shall be supplied to the ENGINEER and the CONTRACTOR by the testing laboratory as soon as possible. To expedite construction, it is necessary that the CONTRACTOR and ENGINEER be furnished with the results of all tests as soon as testing is completed.

The availability of the independent testing laboratory when needed and speed of testing and reporting are to be considered the responsibility of the CONTRACTOR.

During the course of concrete construction, it may be deemed necessary by the ENGINEER to verify concrete composition and/or thickness. This will be accomplished by coring the completed and in place concrete. The CONTRACTOR shall remove and replace the samples at no extra charge. If the concrete is deficient in composition, compaction, or thickness, satisfactory correction shall be made immediately.

Should the CONTRACTOR require any of the above verification sampling, the CONTRACTOR agrees to assume all costs incurred, including the testing of the sample.

The pavement shall not be opened to traffic prior to seven (7) days after construction and not before flexural strengths of 500 psi and compressive strengths of 3,000 psi are attained or without approval by the ENGINEER.

501-3.5 PROPORTIONING MATERIALS. Concrete shall be composed of Portland Cement, fly ash, fine aggregate, coarse aggregate, admixtures, and water as specified. The mix shall be designed in accordance with Subsection 501-3.3 of these specifications.

The amount of water specified shall include the surface moisture carried by the aggregates at the time of mixing. This amount of water shall be determined by tests made by the CONTRACTOR, and the quantity of mixing water to be added to the batch shall be added to that found to be carried by the aggregates to total the rate specified. The number of tests required and the consequent changes in the amount of mixing water to be added will depend on the control exercised in the gradation and moisture contents of the aggregate.

The amount of water shall also include that liquid added to the batch in the form of admixtures.

The amounts and proportions of fine and coarse aggregates to be used in each mix shall be such as to produce a plastic, workable mix, free from harshness, which can be

readily placed into the corners and angles of the forms and around reinforcement and other embedded work without undue accumulation of water laitance on the surface, and such that there will be no honeycombing in the structure.

Proportions of fine and course aggregates shall be such that the ratio for the coarse to the fine aggregate shall not be less than one (1) nor more than two (2). On all work under these specifications, a cubic yard of concrete shall contain not less than six (6) sacks (564 lbs.) of cement or cement and fly ash mixture.

501-3.6 BATCHING AND MIXING CONCRETE. Mixing of concrete shall be done in a rotary batch mixer of a type acceptable to the ENGINEER. The volume of the mixed material for each batch shall not exceed the manufacturer's rated capacity of the mixer.

The batch materials shall be delivered to the mixer measured accurately to the required proportions and shall be mixed continuously for not less than one and one-half (1½) minutes after all materials including water are in the mixer during which time the mixer shall rotate at the speed recommended by its manufacturer. The entire batch shall be discharged before recharging the mixer. The mixer shall be cleaned as required to insure adequate and complete mixing.

In lieu of jobsite mixing, ready mixed concrete meeting the requirements specified herein and all applicable requirements of ASTM C94 may be approved provided the quantity and rate of delivery of materials will be such as to permit unrestricted progress of the work in accordance with the placing schedule. When the air temperatures are above 90°F, the concrete shall be discharged within one (1) hour. When air temperatures are below 90°F, the concrete shall be discharged within a maximum of one and one-half (1½) hours or 300 revolutions of the drum, whichever comes first, after the introduction of the mixing water to the cement and aggregates.

Truck mixers shall be equipped with a means by which the number of revolutions of the drum, blades, or paddles may be readily verified.

Two copies of complete data concerning mixing and transportation methods shall be submitted to the ENGINEER for approval.

501-3.7 COLD WEATHER. When the temperature is below 40°F for more than three (3) days, or when there is a probability that such temperature will occur during the twenty-four (24) hour period after placing, special provisions shall be taken. Except as otherwise specified, mixing, placing, and protection shall be in accordance with the latest edition of the Portland Cement Association Manual entitled "Design and Control of Concrete Mixtures." Curing shall be specified in Subsection 501-3.14.

Frozen concrete shall be immediately removed upon direction of the ENGINEER and replaced with new concrete at no expense to the Owners.

In order to maintain the temperatures specified, the concrete shall be entirely enclosed with tarpaulins, polyethylene plastic sheets, commercial insulating blanket, or bat

insulation, and all fuel and suitable heating equipment and the necessary labor and supervision shall be furnished. Unvented heaters shall not be used. Only commercial insulating blanket or bat insulation will be permitted as a covering without addition of heat. Full responsibility for the protection of the work shall be under this section.

During freezing weather, temperature records shall be kept by the CONTRACTOR and furnished to the ENGINEER daily showing the temperature at four-hour intervals of the outside air, of the air in the coldest part of the enclosure near the concrete, of the concrete as it is placed, and of the concrete in place at such points as the ENGINEER may direct.

501-3.8 HOT WEATHER. Concrete materials shall be placed at the lowest practicable temperature except as specified in Subsection 501-3.7 for cold weather. When hot weather conditions exist that would seriously impair the quality and strength of the concrete, the concrete shall be placed in accordance with the latest edition of the Portland Cement Association Manual entitled "Design and Control of Concrete Mixtures," except as otherwise specified herein.

During hot weather conditions, the temperature of the concrete immediately before it is placed in the forms shall be between 50°F and 90°F.

Shaved ice may be used in the mixing water to reduce the temperature of the concrete at the mixer, but there shall be no ice in the concrete when it is discharged from the mixer.

Retarder admixes shall not be used to control the setting time of the concrete.

501-3.9 SUBGRADE. Subgrades for placing concrete shall be prepared in accordance with Section 200 "Earthwork" and shall be damp but not wet before the concrete is placed. Hand tamping of subgrades will not be permitted. Approved mechanical type shall be used. A minimum of 6 inches of subgrade preparation and compaction testing shall be incidental to other items.

The CONTRACTOR shall engage an independent testing laboratory approved by the ENGINEER to perform subgrade compaction tests. Subgrade compaction tests in accordance with ASTM D1557 shall be performed and reported at the following frequencies:

a. One for every 12 lots of new sidewalks, driveways, and/or driveway widenings.

b. One for every 20 repairs of sidewalks, driveways, curb and gutters, and valley gutters.

c. One for every 400 square feet (SF) of full depth pavement repair.

d. Two for each new construction unit where 1,000 linear feet (LF) or less of curb and gutter is constructed.

e. One for each valley gutter placed.

f. One for each 750 square yards (SY) of concrete pavement placed.

Should it become necessary to require an additional number of initial compaction tests, over and above the number specified, the ENGINEER will consider additional testing as extra work.

501-3.10 NON-BITUMINOUS BASE COURSE. Base Courses, when called for on the plans or designated by the ENGINEER, shall be prepared in accordance with Section 300 "Base Courses" and shall be damp but not wet before concrete is placed.

501-3.11 FORMS. After the subgrade and base course, if required, have been graded and compacted, the forms shall be set and secured in such a manner as to prevent bulging away from a true line when poured and tamped with concrete, and said forms shall be constructed of wood or steel. If made of wood, they shall not be less than one and 1 ½ inches and one side planed smooth. The top edge of each form shall be true and straight and when set and secured shall conform to the grade of the finished pavement. All forms shall be clean and coated with oil or other approved material before the concrete is placed. Forms shall have a depth not less than the depth of the concrete to be constructed.

501-3.12 PLACING CONCRETE. The subgrade shall be sprinkled directly ahead of the placing of concrete. The concrete shall be placed on the moist subgrade and spread uniformly to the required depth with as little handling as possible and shall be mechanically vibrated to the forms or header boards to prevent voids and honeycombed surfaces. The concrete shall be consolidated so as to produce a uniformly dense concrete and so as to flush sufficient mortar to the surface to permit a proper finish without additional water added to the surface. Excessive water, laitance, or other inert material shall be floated from the surface.

501-3.13 SURFACE FINISH. Concrete pavement surfaces shall be wood-floated to a true and even plane and steel troweled. The CONTRACTOR shall provide factory made straight edges, ten (10) feet in length for use in checking forms and final finish of all pavement sections. The maximum allowable deviation from a true plane shall be 1/4 inch in 10 feet on the top and face of forms and all exposed surfaces of the finished pavement section.

New Pavements: After surface irregularities have been removed, and before the concrete attains an initial set, a seamless strip of stiff-fiber artificial grass carpet shall be dragged longitudinally along the full width of the pavement. The surface texture shall be uniformly roughened leaving corrugations in the surface that are uniform in appearance. The width of material in the drag shall be in contact with the full width of the pavement. The drag shall be operated off of a string line with its leading edge attached to bridge riding on the forms or adjacent slabs. The drag shall be maintained clean and free from encrusted mortar. A drag that cannot be cleaned shall be replaced with new fabric.

Repaired Pavements: After the irregularities have been removed and before the concrete attains an initial set, a broom shall be drawn transversely across the pavement. The brooming shall be sufficient to leave significant marking in the pavements.

501-3.14 PROTECTION AND CURING. All concrete work shall be carefully protected from sun, wind, storms, and travel until thoroughly set, and the CONTRACTOR will be held responsible and must make good at the CONTRACTOR's expense any damage from any cause until approved and accepted by the ENGINEER. A chemical curing agent shall be used, provided it is applied in accordance with the manufacturer's specifications and conforms to ASTM C309, Type 2 (white pigmented).

A. Immediately after placement, protect concrete from premature drying, excessively hot or cold temperatures, and mechanical injury.

B. Avoid premature drying by either applying an approved curing compound in accordance with manufacturer's recommendations and approved by the ENGINEER, or by completely covering concrete with an approved moisture barrier to reduce evaporation.

C. Maintain concrete with minimal moisture loss at relatively constant temperature for period necessary for hydration of cement and hardening of concrete.

D. Grade site to maintain positive drainage away from new concrete.

501-3.15 CONTRACTORS STAMPS OR NAME PLATE. The CONTRACTOR shall mark in each 3,000 square feet of pavement, either by stamping or inlaying, an approved metal plate, with CONTRACTOR's name, address, and year in which the pavement was constructed. The stamped letter shall be 1 inch high and ¼ inch deep. If a metal plate is used, the top of the plate shall be flush with the top of the pavement. CONTRACTOR's stamp must be approved by the ENGINEER prior to beginning of the construction year. CONTRACTOR shall be responsible for changing date on the stamp each year.

501-3.16 CONCRETE DISPOSAL. The disposal area(s) for this item shall be within a 9-mile radius of the project when said area is specified on the plans, in the Special Provisions, or by the ENGINEER. When a disposal area is not specified, the CONTRACTOR shall be required to provide such an area which shall be approved by the ENGINEER or haul to the City of Bismarck Solid Waste Facility and pay the required disposal fees.

501-3.17 SAWING CONCRETE. All concrete sawing designated on the plans and/or as directed by the ENGINEER shall have a minimum depth of 3 inches.

Prior to sawing, an inspection of the adjacent slab shall be made to determine if any hairline cracks exist. If any hairline cracks exist, the saw cut line may be positioned so the cracked area may be removed.

501-3.18 SELECT BACKFILL. The material furnished under this item shall be bedding material in accordance with Section 801-2.9 or recycled concrete "readywash" type material and shall be mechanically tamped in place in layers not exceeding 6 inches in depth.

501-3.19 BACKFILL. The newly constructed concrete pavement shall be backfilled within 14 days and compacted in accordance with Section 202.

501-3.20 Joints. Joints in concrete pavement shall be of the design specified and shall be constructed at the spacings and locations shown. The CONTRACTOR shall be responsible to establish joint locations as approved by the ENGINEER.

Transverse Contraction Joints. The contraction joints shall consist of weakened planes created by either sawing, inserting preformed inserts, or forming grooves in the pavement surface on small areas. The location of the grooves to be formed or sawed shall be clearly and accurately marked on the plastic concrete surface by the CONTRACTOR. When specified, the contraction joints shall include a load transfer device.

Sawed contraction joints shall be cut to the required dimensions with proper equipment. Concrete saws shall be adequately powered and furnished with suitable blades to effectively cut pavement joints to required dimensions. Each blade of multiple-blade saws shall be maintained in accurate alignment to the other blades. A device shall be provided to guide the saw along the required joint alignment. Manual guidance of the saw will be permitted if specified results are obtained. A sufficient amount of sawing equipment shall be available to maintain required progress and provide prompt replacement in case of breakdown. Adequate artificial lighting shall be provided for night sawing.

The time and sequence of sawing shall be adjusted so all joints are cut before uncontrolled cracking occurs, and to permit sawing without excessive raveling. Joints shall be sawed within 24 hours to prevent uncontrolled cracking. Uncontrolled cracking that occurs shall be routed, cleaned, and sealed according to 601-3.24, at the CONTRACTOR’s expense. Immediately after sawing, the joint shall be flushed with water under sufficient pressure to remove residue left by the sawing operation. If an uncontrolled crack occurs within 5 feet of a proposed joint location before or during sawing, the joint shall be omitted and sawing of the joint discontinued. Any joint sawed within 5 feet of an uncontrolled crack shall be repaired at the CONTRACTOR’s expense. When sawing is performed before removing side forms, the initial saw cut shall extend to within ½ inch or less of the side forms. If the forms have been removed, the saw cut will be extended to the edges of the slab. Any curing media removed during sawing shall be immediately replaced.

Formed Contraction Joints. A formed contraction joint shall be constructed by installing an approved preformed insert into the plastic concrete before final surface finishing. The inserts shall be vibrated into place or installed in a groove formed by a vibrating cutting bar. The inserts' top edges shall be flush with the concrete surface. Any voids, depressions, or ridges of concrete caused by installing inserts shall be filled or removed by hand-finishing methods and the surface across the joint shall be straight edged according to 501-3.13. The groove formed by the inserts shall be perpendicular to the pavement surface, true to the required alignment, and continuous along the full length of the joint. Inserts, except those designed to remain, shall be removed without damage to adjacent concrete.

When specified for use with transverse contraction joints, the dowel bars shall be held in the specified position parallel to the slab surface and to the centerline within a tolerance of 1/8 inch per foot vertically and horizontally. The dowel bar assembly shall be an approved metal supporting device securely staked to the roadbed and shall hold the dowel bars at the correct spacing, alignment and elevation. The position of these load transfer devices shall be accurately marked with steel pins, or other precise methods, to locate the transverse joint over the center of the dowels. After the dowel bar assembly is staked and the roadbed and the dowel bars are held firmly in place, the assembly ties running parallel to the dowel bars shall be removed to allow for free movement of the dowel bars.

A thin uniform coat of multipurpose lithium grease, NLGI Grade #2, shall be used as the release agent. The release agent shall be applied to the entire length of the dowel bars within two hours of being covered with concrete.

Transverse Construction Joints. A transverse construction joint shall be installed at the end of each day's pour and whenever the elapsed time between placement of successive batches or loads of concrete exceed 45 minutes. Transverse construction joints shall be installed halfway between two normally spaced transverse joints.

The transverse construction joint shall be formed by installing an approved dowel splicer bar basket assembly. The assembly shall hold the dowel splicer bars parallel to the centerline and slab surface. The dowel splicer bars shall be placed with a tolerance of 1/8 inch per foot vertically and horizontally. The assembly shall be staked perpendicular to the centerline and marked. The CONTRACTOR shall pave over the assembly far enough to maintain the elevation of the top of the slab. A full depth saw cut shall be made to expose the dowel splicer bar, the excess concrete shall be disposed of and the threaded dowel extension bar shall be installed.

After the adjacent slab is placed, the construction joint shall be sawed and sealed as specified.

Other Concrete Joints. Other concrete joints shall be formed by an approved header shaped to conform to the cross section of the slab being placed. The header shall be rigid and secure to prevent bulging or displacement while adjacent concrete is being placed and finished. The face of the header in contact with the concrete shall be

perpendicular to the pavement surface and shall be at right angles to the pavement centering. A two-piece or other approved header shall be designed to accommodate proper placement of any dowel bars or reinforcement extending across the joint and to allow removal without damage to the concrete.

The concrete adjacent to the header shall be thoroughly consolidated by an internal vibrator or other approved methods. Segregated or improperly consolidated concrete shall be removed after the pavement has been finished, and the surface adjacent to the header shall be edged to the specified radius.

Longitudinal Weakened Plane Joints. Planes of weakness for longitudinal joints shall be created by sawing grooves in the pavement surface. Grooves shall be sawed to meet dimensions shown and shall be true to the required alignment of the joint.

Longitudinal Construction Joints. The longitudinal joint between adjoining, separately constructed lanes of pavement shall be constructed as shown on the plans. This joint shall be a keyed joint with tie bars. Tie bars across longitudinal construction joints shall be at the locations, spacing, and depth shown. Tie bars may be bent at right angles against the form to the first lane constructed and straightened into final position before the concrete of the adjacent lane is placed. The tie bars may be inserted through small, accurately positioned holes in the side forms. Two-piece connectors may also be used, if approved by the ENGINEER.

All dowel bars, drilled in dowels, dowel bar baskets, tie bars, headers, dowel bar basket assemblies, and sawing of longitudinal and transverse joints shall be considered incidental to concrete pavements placed or repaired and accepted by the ENGINEER.

501-3.21 EXPANSION JOINTS. Expansion joints, which are specified to be sealed, shall be constructed with the top of the expansion joint material 1/2 inch to 3/4 inch lower than the adjacent concrete or form.

501-3.22 SEALING OF JOINTS. All joints specified herein or in the standard details shall be sealed within fourteen (14) days of the construction.

Just before sealing, each joint shall be thoroughly cleaned of all foreign material, including membrane curing compound. Joint faces shall be dry when seal is applied. Material for seal applied hot shall be stirred during heating to prevent localized overheating.

The joint filling shall be done without spilling material on the exposed surface of the concrete. Any excess material on the surface of the concrete shall be removed immediately and the concrete surface cleaned. The use of sand or similar material to cover the seal shall not be permitted. Joint sealing material shall not be placed when the air temperature in the shade is less than 32°F, unless approved by the ENGINEER.

501-3.23 DRILLED IN DOWELS. Dowels shall be drilled into widened, existing, or repaired concrete pavements. Transverse dowels shall be 1¼" x 18" long smooth or #9 x 18" deformed (reinforcing bar).

Holes drilled for dowels shall be located at mid depth of the slab and spaced at 12 inches on center in accordance with the standard details or as directed by the ENGINEER. Transverse doweled holes shall be air blown clean to the back of hole. For smooth dowels, inject high-viscosity epoxy (meeting AASHTO M-235 Class III) into the back of the hole with a pressurized caulking apparatus. Insert 1¼" x 18" smooth dowel to allow air to escape and ensure completely filled holes with bars permanently fastened to the existing concrete. Apply small form to face of hole to keep epoxy from flowing out and remove it prior to placing concrete. Align smooth dowel bars with the pavement direction parallel to the plane of the surface. Lightly coat the end of smooth dowel, extending into the concrete with grease.

Longitudinally #6 x 18 inches deformed bars (grade 40) shall be installed at 4 feet on center. Drills shall be mounted on a rigid frame to provide proper position and alignment. The holes shall be a maximum diameter of 1 3/8 inches transversely and 7/8 inch longitudinally. Dowel bars shall be located at mid-depth of the slab and spaced as indicated on the details or as directed by the ENGINEER. The cost for drilled in dowels shall be considered incidental.

501-2.23A DRILLED IN DOWELS FOR OTHER THAN CONCRETE PAVEMENT. Dowels or reinforcing steel shall be drilled into all widened, existing, or repaired concrete slabs or curbs. Dowels shall be ½ x 12" long smooth or deformed #4 x 12" (reinforcing bar)

Holes drilled for dowels or deformed bars shall be 5/8 inch in diameter and shall be centered on the slab thickness and perpendicular to the surface of the slab and spaced at 12 inches on center for transverse joints and every 2 feet for longitudinal joints or as directed by the ENGINEER.

501-3.24 JOINT AND CRACK SEALING. Random cracks narrower than ½ inch and existing joints in Portland Cement Pavement and Curb and Gutter shall be sealed as directed by the ENGINEER. Before sealing, each joint shall be thoroughly cleaned mechanically of all dust, dirt, concrete scale, or other foreign matter and blown out with a jet of compressed air. The joint face shall be clean and dry when the joints are sealed. Joints shall not be sealed when the air temperature is below 40°F.

Joints shall be sealed within 1/4 inch of the surface.

501-3.25 SAW AND SEAL. Repaired working joints and random cracks on Portland Cement Pavements and Curb and Gutters shall be sawed and sealed as follows:

Random Cracks (for uncontrolled cracks only, not settled or displaced cracks)

Saw and seal any single, transverse uncontrolled crack that penetrates the full slab length.

All uncontrolled cracking and repaired working joints shall be sawed and sealed to the following dimensions:

Sawed Joint Width, Inches	Sealant Bead Thickness, Inches	Backer Rod Diameter, Inches	Minimum Sawed Joint Depth, Inches	Backer Rod Placement Depth, Inches
1/2	1/4	5/8	1 1/4	1/2
5/8	5/16	3/4	1 1/2	9/16
3/4	3/8	1	1 3/4	7/8
7/8	7/16	1	1 3/4	11/16
1	1/2	1 1/4	2	3/4

Joints shall be sawed to the nearest 1/8 inch in width and to the neared 1/4 inch in depth.

The joint shall be cleaned of any materials such as rocks, dirt, oil, asphalt, paint, rust, and blown out with compressed air immediately prior to installing sealant. Backer rod, if utilized, shall be 25 percent larger than joint width and installed full width of joint repair. Sealant shall be installed from inside the joint with an approved mechanical device. Sealant shall be filled to 1/4 inch below pavement surface. Sealant shall conform to Section 501-2.9. Joints to be sealed by this method will be marked by the ENGINEER.

Compression joint material within 1/2 inch from surface of pavement shall be removed and sealed, which will be paid at the unit price bid for joint and crack sealing.

501-3.26 FULL DEPTH SLAB REPAIR. This work shall consist of removal and replacement of full depth concrete pavement as follows:

Except where joints form the edge of the repair, the edges of the repair area shall be sawn full depth with a diamond or carborundum blade. If the full depth cuts are made in more than one pass, the final depth cut shall be made immediately following the partial depth cuts. Transverse cuts shall be made perpendicular to centerline, and longitudinal saw cuts shall be made parallel to centerline. Saw cuts which extend into concrete which will remain shall be only long enough to guarantee a full depth cut of the repair area and shall be sealed according to 501-3.24. Concrete shall be removed within 24 hours of the sawing. When the repair area is repaired, the edges shall be reasonably free of frays or spalls at the pavement surface. The cost of removing, hauling, and disposing of existing concrete and sealing saw cut overruns shall be included in the unit price bid for full depth repair.

Existing concrete shall be removed with minimum disturbance of existing subgrade. All voids which existed below the repair area shall be filled and compacted with material meeting requirements of Section 302 of City of Bismarck Standard Specifications – Stabilized Gravel Base as directed by the ENGINEER. The cost of hauling, placing, and compacting the material shall be incidental to the full depth repair items. Any over depth removal unauthorized by the ENGINEER shall be replaced and compacted as above at the CONTRACTOR's expense.

At joints designated by the ENGINEER, dowel bars shall be drilled transversely and longitudinally at full depth repair areas into existing concrete faces and sealed in accordance with Section 501.

Specifications for concrete mix and placement shall conform to Section 501 with the following exception:

Concrete for full depth repair shall be a 7.4 bag mix with a minimum water content of 4.75 gal./bag of cement. The cement used for repair work shall be Type III cement meeting the requirements of AASHTO M75. Water reducing and set acceleration may be achieved through the use of a commercial admixture which meets AASHTO Specification M194 Type A, C, or E. A design of this concrete mix shall be submitted in accordance with 501-3.3. Existing joints whether longitudinal or transverse through an area removed for full depth repair shall be sawed within 72 hours of concrete placement and sealed in accordance with 501-3.24 "Joint and Crack Sealing." Mechanical jointing will not be allowed in these repair areas.

501-3.27 CURB AND GUTTER REPAIR. This item shall include standard curb and gutter (8” or 6” gutter) and standard curb removed and replaced. Curb and gutter removed shall be removed to the closest joint. If the curb is cracked, a joint shall be sawed. The joint shall be no closer than 5 feet to the existing joint in place. All joints not broken adjacent to the repair shall be sawed.

501-3.28 CASTING ADJUSTMENTS. Construction materials, methods, and measurements and payments shall conform to Section 1206**.**

501-3.29 WRAPPED UTILITY BOXES. Construction materials, methods, and measurements and payments shall conform to Section 1206.

501-3.30 CONDUIT. Conduit as specified in Section 1001-2.3 and paid by Section 1001-4.11 shall be installed 24 inches below top of curb or above the existing street light wires and below all new concrete pavements where street light wires are planned to be installed or are existing. For driveway widenings, the existing duct shall be extended using similar materials as in place. When street lighting wire splicing is required and approved by the ENGINEER, splices, in conformance with Section 1001, shall be installed at the outside edges of new concrete and shall be paid for as an extra cost.

All conduit installed on new or repair work shall be indicated by stamping the concrete with the letter “C” on either side of the improvement and over the conduit. The letter “C” shall be 2 3/8 inches high and 3/16 inch in thickness and stamped 1/4 inch deep.

501-4 MEASUREMENT AND PAYMENT

501-4.1 AIR-ENTRAINED PORTLAND CEMENT CONCRETE PAVEMENT. Air Entrained Portland Cement Concrete Pavement shall be measured by the square foot (SF) as indicated and paid for at the unit price bid for “PCC Pavement” complete in place and accepted by the ENGINEER. Pavement thickness shall be as designated in the bid item.

501-4.2 JOINT AND CRACK SEALING. Joint and Crack Sealing shall be measured by the linear foot (LF) and paid for at the price bid for "Joint and Crack Sealing" complete in place and accepted by the ENGINEER.

501-4.3 SAW AND SEAL JOINTS. Saw and Seal Joints shall be measured by the linear foot (LF) and paid for at the price bid for "Saw and Seal Joints" complete in place and accepted by the ENGINEER.

501-4.4 FULL DEPTH REPAIR. Full Depth Repair shall be measured by the square foot (SF) and paid for at the price bid for "Full Depth Repair" for area sawed, removed, replaced, and sealed complete in place and accepted by the ENGINEER.

501-4.5 SAWING CONCRETE. Sawing concrete shall be measured by the linear foot (LF) and paid for at the unit price bid for “Concrete Sawing” completed to the required depth and approved by the ENGINEER.

501-4.10 SELECT BACKFILL. Select Backfill when listed on the proposal form shall be measured by the ton (TON) and paid for at the unit price for “Select Backfill” complete in place and accepted by the ENGINEER.

501-4.11 ADDITIONAL PORTLAND CEMENT. During the course of construction, the ENGINEER may need to require the use of additional Portland Cement in the concrete mix. When requested and used, all cement greater than six (6) sacks (564 lbs.) per cubic yard of concrete except for full depth repairs shall be measured by the sack (94/lbs.) and paid for at the unit price bid for “Additional Portland Cement” complete in place and accepted by the ENGINEER.

SECTION 502 – POZZOLINIC PORTLAND CEMENT

502-1 DESCRIPTION

This work shall consist of a base course composed of pozzolonic air entrained Portland Cement Concrete, constructed on a prepared subgrade in accordance with these specifications and in conformity with dimensions and typical cross sections shown on the plans and with lines and grades established by the ENGINEER.

502-2 MATERIALS

502-2.1 GENERAL. Prior to construction, the CONTRACTOR shall submit for approval by the ENGINEER a Certified Analysis of materials listed in Subsections 502-2.2, 502-2.3, and 502-2.5.

502-2.2 PORTLAND CEMENT. Portland Cement shall meet the requirements of Subsection 501-2.2.

502-2.3 AGGREGATE. The CONTRACTOR shall notify the ENGINEER of the source of the aggregate which is proposed for use on the contract. Sufficient time shall be allowed so that sampling and testing can be completed prior to the beginning of construction. During the construction period, the CONTRACTOR shall at all times make available to the ENGINEER samples of aggregate.

The aggregate used shall conform to the requirements of ASTM C33. The aggregate shall be tough, durable, and sound, and shall consist of crushed stone, crushed gravel, gravel, sand gravel, sand, or other natural granular and approved material which have essentially the same qualities and meet all the requirements when combined within the following limits for gradation.

Square Mesh Sieve Size	Percent By Weight Passing
¾"	100
½"	70-100
No. 4	40-70
No. 8	30-60
No. 16	22-50
No. 30	15-41
No. 50	10-30
No. 100	6-20
No. 200	4-10
Max. % Shale & Soft Rock	5
Max. % Clay (0.005 mm)	5
Max. L. A. Abrasion Loss	40

502-2.4 WATER. Water shall meet the requirement of Subsection 501-2.6.

502-2.5 FLY ASH. Fly Ash shall meet the requirements of Subsection 501-2.2a.

502-3 CONSTRUCTION REQUIREMENTS

502-3.1 GENERAL. The CONTRACTOR shall furnish all labor, materials, and services necessary for and incidental to the completion of all work as shown on the drawings and specified herein. All machinery and equipment owned or controlled by the CONTRACTOR which is proposed for use on the work shall be of sufficient size to meet the requirements of the work and shall be such as to produce satisfactory work; all work shall be subject to the inspection and approval of the ENGINEER. The CONTRACTOR shall employ at all times a sufficient force of workmen of such experience and ability that the work can be prosecuted in a satisfactory and workmanlike manner.

Identify an acceptable concrete wash out area(s). Dumping concrete or concrete waste within the CITY's right-of-way or easements including the storm water system or on adjacent properties is prohibited without the written consent of the CITY or the affected property owner.

502-3.2 MATERIALS STORAGE

(a) Cement. Cement storage shall meet the requirements of Subsection 501-3.2 (a).

(b) Aggregates. Aggregate storage shall meet the requirements of Subsection 501-3.2 (b).

(c) Fly Ash. Fly ash shall be stored in weather tight facilities to be approved by the ENGINEER.

502-3.3 ADVANCE DESIGN OF CONCRETE MIXES. Design and tests for each concrete mix to be used under this contract shall be made using aggregates which have been approved for this work. Mixes shall be designated in accordance with the following: to attain the required strength at the allowable slumps and air content using the specified aggregates, water, and fly ash.

Cement	70 lbs.
Fly Ash	400 lbs.
Water Reducing Admixture	19 oz.
Air Entrained Admixture	9 oz.
Aggregate	3100 lbs.
Water	35 gal.

Advance tests of the proposed mix shall be made in accordance with ASTM C192. Six (6) standard 6-inch diameter compression test cylinders shall be made for the mix design, three (3) to be tested at seven (7) days and three (3) to be tested at fourteen (14) days. Concrete tested shall contain all required and/or proposed admixtures and in

addition to the testing required by ASTM C192 shall be tested for air content by ASTM C231.

The advance mix design and approved results of seven (7) day tests on cylinders made from the advance mix design is required three (3) days prior to concrete placement. The required minimum strength of the concrete shall be 1200 psi at seven (7) days.

Tests for aggregates as required in Subsection 501-2.4 and 501-2.5 may be a part of these tests. The above tests shall be repeated if necessary because of changes in materials or unsatisfactory results.

502-3.4 CONCRETE TESTING. During the process of the work and for each different mix of concrete, a set of three (3) standard 6-inch diameter compression test cylinders shall be made in the field and tested for each day's operation where fifteen cubic yards (15 CY) of concrete or more are placed. The cylinders comprising one set will be made from the same sample of concrete and one (1) cylinder tested at seven (7) days, one (1) at fourteen (14) days, and one (1) at twenty-eight (28) days. The required minimum strength of the concrete shall be 1200 psi at seven (7) days, 1500 psi at fourteen (14) days, and 2000 psi at twenty-eight (28) days.

Slump tests made in accordance with ASTM C143 shall be made as necessary to maintain desired concrete consistency. Slump tests shall also be made and recorded for each sample of concrete used in making test cylinders. The maximum allowable slump of the concrete mix shall be 4 inches. Air content in accordance with ASTM C231 shall also be tested and recorded for each sample of concrete used in making test cylinders. The air content shall fall within the range of 4 percent to 7 percent.

If test cylinders show a strength at twenty-eight (28) days which fails to meet the specified strength for the class of concrete from which the sample is taken, then the concrete presented by such test cylinder shall be further tested by the ENGINEER. If such further tests indicate that concrete has been placed which does not meet the compressive strength requirements established by this specification, the concrete shall be rejected and shall be removed and replaced with new work of the specified strength unless otherwise instructed by the ENGINEER. All testing shall be incidental and any replacement shall be done at the CONTRACTOR's expense including retesting.

502-3.5 PROPORTIONING MATERIALS. Concrete shall be composed of Portland Cement, fly ash, aggregate, and water admixtures as specified. The mix shall be designed in accordance with Subsection 502-3.3 of these specifications.

The amount of water specified shall include the surface moisture carried by the aggregates at the time of mixing. This amount of water shall be determined by tests made by the CONTRACTOR and the quantity of mixing water to be added to the batch shall be added to that found to be carried by the aggregates to total the rate specified. The number of tests required and the consequent changes in the amount of mixing water to be added will depend on the control exercised in the gradation and moisture contents of the aggregates.

The amount of water shall also include the liquid added to the batch in the form of admixture.

The amount and proportion of aggregate to be used in each mix shall be such to produce a plastic, workable mix, free from harshness, which can be readily placed into the corners and angles of the forms and around reinforcement and other embedded work without undue accumulation of water or laitance on the surface, and such that there will be no honeycombing in the structure.

502-3.6 BATCHING AND MIXING CONCRETE. Batching and mixing concrete shall meet the requirements of Subsection 501-3.6.

502-3.7 COLD WEATHER. Cold weather shall meet the requirements of Subsection 501-3.7.

502-3.8 HOT WEATHER. Hot weather shall meet the requirements of Subsection 501-3.8.

502-3.9 SUBGRADE. Subgrade shall meet the requirements of Subsection 501-3.9.

502-3.10 NON-BITUMINOUS BASE COURSE. Non-bituminous base course shall meet the requirements of Subsection 501-3.10.

502-3.11 FORMS. Forms shall meet the requirements of Subsection 501-3.11.

502-3.12 PLACING CONCRETE. Placing concrete shall meet the requirements of Subsection 501-3.12.

502-3.13 SURFACE FINISH. Concrete pavement surfaces shall be wood-floated to a true and even plane. The CONTRACTOR shall provide factory made straightedges, 10 feet in length for use in checking forms and final finish of all pavement sections. The maximum allowable deviation from a true plane shall be ¼ inch in 10 feet on the top and face of forms and all exposed surfaces of the finished pavement section.

502-3.14 PROTECTION AND CURING. Protection and curing shall meet the requirements of Subsection 501-3.14.

502-3.15 JOINTS. Contraction joints shall be sawed to a minimum depth of one and one half inches 1½ inches. Contraction joint spacing shall be a maximum of 8 feet.

502-4 MEASUREMENT AND PAYMENT

502-4.1 POZZOLONIC PORTLAND CEMENT CONCRETE. Pozzolonic Portland Cement Concrete shall be measured by the cubic foot (CF), square yard (SY), or square foot (SF) as indicated on the proposal and paid for at the unit price bid complete in place and accepted by the ENGINEER.

SECTION 503 – CONTROLLED DENSITY FILL (CDF)

503-1 DESCRIPTION

This work shall consist of placement of a controlled density fill which is a mixture of coal fly ash, water, sand, and Portland Cement that flows like a liquid, sets up like a solid, is self-leveling, and requires no compaction or vibration to achieve maximum density.

503-2 MATERIALS

503-2.1 PORTLAND CEMENT. Portland Cement shall conform to the requirements of ASTM C150, Type 1. If for any reason cement becomes partially set or contains lumps of caked cement, it shall be rejected. Cement salvaged from discarded or used bags shall not be used.

503-2.2 FLY ASH. Fly Ash shall conform to ASTM C618, Class C or F.

503-2.3 FINE AGGREGATE (SAND). Fine aggregate shall conform to the requirements of ASTM C33 except for aggregate gradation. Any aggregate gradation which produces performance characteristics of the ASTM specified herein will be accepted, except as follows:

Sieve Size	Percent Passing by Weight
3/4 inch	100
No. 200 (0.075mm)	0-12

503-2.4 WATER. Water used in mixing shall be free of oil, salt, acid, alkali, sugar, vegetable matter, or other substances injurious to the finished product.

Dyes and other methods of coloring the backfill material may be incorporated if desired.

503-3 CONSTRUCTION REQUIREMENTS

503-3.1 PROPORTIONS. The CONTRACTOR shall submit, to the ENGINEER, a mix design including the proportions and source of material, admixtures, and dry cubic yard batch weights. The mix shall contain up to 100 pounds of cement and 300 pounds of fly ash per cubic yard, with the remainder of the volume composed of sand, water, and any approved admixtures.

a. COMPRESSIVE STRENGTHS

CDF shall be designed to achieve a 28-day compressive strength of 80 to 130 psi when tested in accordance with ASTM C39. There should be no significant strength gain after 28 days. Test specimens shall be made in accordance with ASTM C31 except that the samples will not be rodded or vibrated and shall be air cured in their molds for the duration of the cure period. The air content, tested in accordance with ASTM C231, shall fall within the range of 10 percent to 12 percent.

b. CONSISTENCY

Consistency of the fresh mixture shall be such that the mixture may be placed without segregation. A desired consistency may be approximated by filling an open-ended 3-inch diameter cylinder, 6 inches high to the top, with the mixture and the cylinder immediately pulled straight up. The correct consistency of the mixture will produce an approximate 8-inch diameter circular – type spread without segregation. Adjustments of the proportions of materials should be made to achieve proper solid suspension and flowable characteristics, however, the theoretical yield shall be maintained at 1 cubic yard for the given batch weights.

503-3.2. PLACEMENT

a. PLACEMENT. CDF may be placed by any reasonable means from a mixing unit into the space to be filled. Agitation is required during transportation and waiting time. Placement shall be performed in such a manner that structures or pipes are not displaced from their desired final position and intrusion of CDF into undesirable areas is avoided. The material shall be brought up uniformly to the fill line shown on the plans or as approved by the ENGINEER. Each placement of CDF shall be as continuous as possible. If CDF is placed in more than one layer, the base layer shall be free of surface water and loose or foreign material prior to placement of the next layer.

b. LIMITATIONS OF PLACEMENT. CDF shall not be placed on frozen ground. Mixing and placing may begin when the air temperature is at least 35 degrees and rising. At the time of placement, CDF shall have a temperature of at least 40 degrees. Mixing and placement shall stop when the air temperature is 40 degrees and falling or when the anticipated air temperature will be 35 degrees F or less in the 24-hour period following proposed placement.

503-3.3 CURING AND PROTECTION

a. CURING. The air content of the CDF should be maintained at temperatures above freezing for a minimum of 72 hours. If the CDF is subject to temperatures below 32 degrees, the material may be rejected by the ENGINEER if damage to the material is observed.

b. PROTECTION. The CDF shall not be subject to loads and shall remain undisturbed by construction activities for a period of 48 hours or until a compressive strength of 15 psi is obtained. The CONTRACTOR shall be responsible for providing evidence to the ENGINEER that the material has reached the desired strength. Acceptable evidence shall be based upon the CONTRACTOR's testing firm compressive test results.

503-4 MEASUREMENT AND PAYMENT

503-4.1 CONTROLLED DENSITY FILL. When not incidental to other items, Controlled Density Fill shall be measured by the cubic yard (CY) or other method indicated on the

proposal and paid for at the unit price bid complete in place and accepted by the ENGINEER.

SECTION 600

CONCRETE SIDEWALKS, DRIVEWAYS, CURBING, CURB AND GUTTER

SECTION 601 – CONCRETE SIDEWALKS

601-1 DESCRIPTION

This work shall consist of the construction of Air-Entrained Portland Cement Concrete Sidewalks in accordance with these specifications and standard details at the locations and to the lines and grades shown on the plans or as directed by the ENGINEER. This work shall also include the removal of old sidewalk or block walk, slabjacking, and sidewalk repair when listed on the proposal, as shown on the plans, or as directed by the ENGINEER.

601-2 MATERIALS

601-2.1 Materials shall meet the requirements of Subsection 501-2.

601-2.2 ADA RAMPS

The following detectable warning panel cast-in-place systems have been approved:

ADA Arcis Tactile (503-647-5042) http::arcis-corp.com/#/tactile/

Detectable Warning Paver by Hanover Architectural Products (800-426-4242) http://www.hanoverpavers.com/html/detectable.html

Cast Iron Coated by East Jordan Iron Works (800-874-4100) http://www.ejiw.com/

ADA Replaceable (Wet-Set) Stainless Steel Tactile Unit by ADA Solutions, Inc. (800-372-0519) http://www.adatile.com/

Stainless Steel Detectable Warning Tile by Advantage Tactile Systems, Inc. (800-679-4022) http://www.advantagetactile.com/

MetalPanel by Metadome, LLC (608-249-8644) http://www.metadome.com/

Access Tile by Access Products, Inc. (888-679-4022) http://www.accesstile.com/
(NOTE: The department has reviewed information the Access-Tile/Access Products, Inc. may be involved in a lawsuit which may or may not affect their ability to provide this product.)

Tiles shall be held within the following dimensions and tolerances:

Length and Width: 12” x 12,” 24” x 24,” 24” x 36,” 24” x 48,” or 24” x 60”

Depth:	1.400”	±5% max.
Face Thickness:	0.875”	±5% max.
Warpage of Edge:	±5% max.	
Water Absorption:	0.35% max., ASTM D570	
Slip Resistance:	not to be less than 0.80 on top of domes and field area, ASTM C1028	
Compressive Strength:	not less than 18,000 psi, ASTM C695	
Tensile Strength:	not less than 10,000 psi, ASTM D638	
Flexural Strength:	not less than 24,000 psi, ASTM C293	
Abrasive Wear:	not to exceed 0.030” after 1,000 abrasion cycles, ASTM D2486.	

Panels will be measured and paid to the nearest Square Foot of surface for Detectable Warning Panels in place and accepted by the ENGINEER. The 4-inch to 6-inch thick tapered landing strip per standard detail No. 600-3 shall be considered incidental to this item. The 4-inch sidewalk will be measured and paid for on the entire crosswalk including area of the panel and where shown as “paid as ADA Ramp” in detail 600-3.

601-3 CONSTRUCTION REQUIREMENTS

Construction requirements shall conform to Subsection 501-3 with the following additional provisions:

601-3.1 SIDEWALK REMOVAL. All concrete sidewalk removed shall be disposed of in accordance with Subsection 501-3.16. All repaired sidewalks must be removed to the nearest joints.

601-3.2 JOINTS. Expansion joints shall be placed in sidewalks at intervals as shown on the Standard Details or as directed by the ENGINEER. Expansion joints shall be used when adjoining private concrete slabs unless otherwise approved by the ENGINEER. The expansion joint material shall have a thickness of 1/2 inch to 3/4 inch.

The sidewalk shall be divided into sections by contraction joints formed by a jointing tool or sawing.

601-3.3 FORMS. Forms shall conform to Subsection 501-3.11. Forms for use on curves shall be capable of installation to within 1/2 inch of the true curve; if the radius is less than 400 feet, they shall be either flexible material or shaped to fit the curve.

601-3.4 CONTRACTOR'S STAMP OR NAME PLATE. The CONTRACTOR shall mark at the ends of the sidewalk, either by stamping or by inlaying an approved metal plate, which shall conform to Subsection 501-3.15.

601-3.5 BACKFILL. The sidewalk shall be backfilled within 14 days of placement to a level width of at least 2 feet along all edges and to a height equal to the top finished grade of the sidewalk. The backfill shall be compacted in accordance with Section 202 "Excavation and Embankment."

601-3.6 SLABJACKING. This work shall consist of raising, leveling, void filling, and stabilizing concrete slabs by drilling through the concrete slab and forcing a fluid like material on the bottom of the slab.

Materials shall meet the requirements of Subsection 501-2.11.

Slabjacking shall not be done during the following weather conditions:

1. Excessive rain or when temperature is below 32 degrees.

2. When frost is in the ground.

3. During hot weather where the mixture could stand for any length in time causing setup to occur.

Slabjacking holes shall be drilled into slabs 1 1/2 to 2 5/8 inches in diameter. Equipment used to drill holes shall not strike too heavy a blow and shall avoid breaking off the lower side of the slab as the drill goes through. Any damage to existing adjacent slabs or to the slab to be repaired shall be the responsibility of the CONTRACTOR. Spacing and location of holes shall be drilled according to the particular job and the way the slab must be lifted, tilted, and voids filled.

Slabjacking holes shall be finished by removing excess slabjacking materials and finishing off each hole with a dry cement mix leaving a slight crown in the middle to allow shrinkage of cement and shall be completed within 7 days after completion of lifting. Any finished surface which has settled below the slab grade shall be removed and refinished. All joints adjacent or within the slabjacked area wider than 3/8 inches shall be sealed in accordance with Subsection 501-2.9.

The work area shall be kept clean and shall be safe at all times.

When a finished slab does not meet the following tolerances, it will be considered a failure and therefore not accepted by the ENGINEER and no payment will be made:

Curb & Gutter Joints. Sags no more than ¼ inch per 10 linear feet (LF) or ¼ inch vertical separation at a joint.

4"-6"-8" Sidewalks. ½ inch vertical separation per joint.

Valley Gutters and Driveways. Will be at the discretion of the ENGINEER.

601-3.7 4-INCH EXPANSION JOINT WITH DOWELS. Four-inch expansion joint shall be doweled in accordance with standard details. Dowels shall be 1/2 inch by 12 inches long, smooth or #4 x 12" deformed (reinforcing bar). Dowels shall be centered on the 4-inch slab parallel to the surface of the slab at 12-inch centers. Paper tubes shall be used as approved by the ENGINEER. 4-inch Expansion Joints with Dowels shall be incidental to other bid items.

601-3.8 4-INCH SIDEWALK REPAIR. This item shall include 4-inch concrete removed and replaced. All 4-inch concrete shall be removed to the nearest existing joints. All joints not broken adjacent to the repair shall be sawed. All existing concrete must be drilled, and 12-inch #4 reinforcing steel shall be installed. Drills for transverse joints shall be set on 12-inch centers parallel to the existing slab surface, and placed mid-depth on the slab. Drills for longitudinal joints shall be set at 2-foot intervals, placed mid-depth on the slab and parallel to the existing slab surface. The depth of the drilled hole shall be no less than 6 inches and shall be drilled ¼ inch larger than the dowel bar or reinforcing steel specified. Expansion joints and paper tubing for reinforcing steel or dowel shall be added at the direction of the ENGINEER. Expansion joints shall be sealed in accordance with Section 502-4.9. All subgrade preparation, sawing, expansion joints, dowels, reinforcing steel or drilled in dowels, and joint sealing shall be considered incidental to the bid price for 4-Inch Sidewalk Repair.

601-3.9 CONCRETE QUALITY CONTROL AND SUBGRADE TESTING. Testing frequencies shall conform to Section 501-3.4. Payment shall be considered incidental to other bid items.

601-3.10 ADA CURB RAMPS. ADA curb ramps must be installed when installation of new sidewalks and repair of existing sidewalks, curbs, valley gutters, and utility cuts are made at an intersection. For any repair done to an existing ADA curb ramp that does not have the detectable warning panels, the CONTRACTOR shall remove the additional concrete to install a detectable warning panel.

The ADA curb ramps shall be tied to adjacent concrete pavements and curb with 1-foot #4 reinforcing bars spaced at 1-foot centers.

The curb ramp landing lengths, directions, and placements of the detectable warning panels shall be determined by the ENGINEER in the field.

The ADA curb ramps shall be protected by steel fence posts until construction of adjacent sidewalks is completed. The number of fence posts and the location shall be in accordance with standard details or shall be determined by the ENGINEER. Cost of furnishing and installing steel fence posts shall be considered incidental to the price bid for ADA Ramp.

The detectable warning panels shall consist of a surface of truncated domes aligned in a square grid pattern in the predominant direction of travel.

Dome Size: Truncated domes in a detectable warning surface shall have a base diameter of 0.9 inches minimum to 1.4 inches maximum, a top diameter of 50% of the base diameter minimum to 65% of the base diameter maximum, and a height of 0.2 inches.

Dome Spacing: Truncated domes in a detectable warning surface shall have a center-to-center spacing of 1.6 inches minimum and 2.4 inches maximum and a base-to-base spacing of 0.65 inches minimum measured between the most adjacent domes on the square grid.

Size: Detectable warning surface shall extend 24 inches in the direction of travel and the full width of the curb ramp landing.

The detectable warning surface shall be located so that the nearest edge is 6 inches minimum and 8 inches maximum from the face of the curb, or determined by the ENGINEER in the field.

The detectable warning panels shall be installed according to the manufacturer's recommendation and in accordance with Standard Detail Nos. 600-3 and 600-4. All costs of labor, materials, and equipment to install panels shall be included in the price for ADA Curb Ramps.

601-3.11 SIDEWALK TRENCH DRAIN. Sidewalk trench drains shall be installed to the dimensions shown on the plans in accordance with Standard Detail No. 600-5. All costs of labor, materials, and equipment to install sidewalk trench drains shall be included in the price for Sidewalk Trench Drain.

601-3.12 RELOCATION OF LAWN IRRIGATION SYSTEM

Any concrete work requiring the relocation of any part of a lawn irrigation system shall be paid for as extra work as outlined in Section 126.

601-4 MEASUREMENT AND PAYMENT

601-4.1 4-INCH CONCRETE SIDEWALK. Concrete sidewalk shall be measured by the square foot (SF) and paid for at the unit price bid for 4-Inch Concrete Sidewalk complete in place and accepted by the ENGINEER.

601-4.2 4-INCH SIDEWALK REPAIR. Measurement and payment shall be per square foot (SF) of Sidewalk Repair for sidewalk removed and replaced, sawing, subgrade preparation, dowels and drilled in dowels, expansion joints, sealed, complete in place and accepted by the ENGINEER.

601-4.3 SIDEWALK REMOVAL. Sidewalk removed and disposed of shall be measured by the square foot (SF) and paid for at the unit price bid for "Sidewalk Removal." All sidewalk removed which is less than 6 inches in thickness will be paid for under this item. All sidewalk removed which is 6 inches and less than 8 inches in thickness will be paid for under Section 602-4.3 "Driveway Removal." All sidewalk removed which is 8 inches or more in thickness will be paid for under Section 602-4.2A "8-inch Concrete Removal."

601-4.4 SLABJACKING 4-INCH CONCRETE SIDEWALK. Slabjacking 4-inch concrete sidewalk shall be measured by the square foot (ft) and paid for by the unit price for "Slabjacking 4-Inch Concrete" complete, in place, and accepted by the ENGINEER.

601-4.5 ADA CURB RAMPS. Measurement and payment shall be by the square foot (SF) for ADA Ramp complete in place and accepted by the ENGINEER.

601-4.6 SIDEWALK TRENCH DRAIN. Measurement and payment shall be by the linear foot (LF) for “Sidewalk Trench Drain - Width” complete in place and accepted by the ENGINEER.

SECTION 602 – CONCRETE DRIVEWAYS

602-1 DESCRIPTION

This work shall consist of the construction of new, removed, and replaced slabjacking of Air-Entrained Portland Cement Concrete Driveways, and Valley Gutters. 8-inch concrete shall be any concrete 8 inches or thicker, and 6-inch concrete shall be 5 inches and up to less than 8 inches in thickness in accordance with these specifications and standard details at the locations and to the lines and grades shown on the plans or as directed by the ENGINEER.

602-2 MATERIALS

Materials for Portland Cement Concrete shall meet the requirements of Subsection 501-2.

602-3 CONSTRUCTION REQUIREMENTS

Construction requirements shall conform to Subsection 501-3 with the following additional provisions:

602-3.1 CONTRACTOR'S STAMP OR NAME PLATE. The CONTRACTOR shall mark in each driveway, either by stamping or by inlaying an approved metal plate conforming to Subsection 501-3.15.

602-3.2 BACKFILL. The driveway shall be backfilled within 14 days of placement to a level width of at least 2 feet along all edges and to a height equal to the top finished grade of the driveway. The backfill shall be compacted in accordance with Section 202 "Excavation and Embankment."

602-3.3 DRIVEWAY REMOVAL. Driveway removal shall consist of removal of concrete that is 5 inches or greater in thickness and less than 8 inches. All curb and gutters or concrete pavements attached shall be paid for as curb removed, curb repaired, or full-depth pavement repair. Disposal shall be in accordance with Section 501-3.16.

602-3.4 SEALING JOINT. Joints sealed shall be sealed in accordance with Subsections 501-3.22 and 501-2.9 and shall be incidental to other bid items.

602-3.5 DRIVEWAY SLABJACKING. Slabjacking of driveways shall be in accordance with Subsection 601-3.6.

602-3.6 TREE REMOVAL OR TREE ROOT CUTTING. Construction methods and measure and payment shall meet the requirements of Section 201.

602-3.7 FORMS. Forms shall conform to Subsection 501-3.11. All tops of driveway forms for driveways shall be set at a 90-degree angle to the street or curb and gutter alignment unless otherwise approved by the ENGINEER.

602-3.8 JOINTS. Expansion joint materials shall not be used in driveway aprons unless approved by the ENGINEER. Jointing shall conform to Detail drawings 600-7 and 600-8 or joints approved by the ENGINEER. Jointing shall be done with appropriate jointing tool or sawed. All joints sawed into driveways must be sawed with a double blade in order for joint sealant to be installed to proper width and depth.

602-3.9 DRIVEWAY REPAIR. Driveway Repair shall include 6-inch or 8-inch concrete driveway removed and replaced. All existing concrete shall be drilled and #4 12-inch reinforcing steel installed and set parallel to the existing slab surface at mid-slab depth. Drill holes shall be set on 12-inch centers for transverse joints and 24-inch centers for longitudinal joints. Depth of the drilled hole shall be no less than 6 inches. Holes drilled for reinforcing steel shall be drilled ¼ inch larger than the steel specified. Remove slabs to the nearest existing joint. All joints not broken adjacent to the repair shall be sawed. If an existing crack runs perpendicular without protruding in all directions, a joint may be sawed along the crack. Such cracks must be 4 feet from the closest joints and may not be smaller. All joints in the non sidewalk portion of the driveway must be sealed to include the curb connected to the driveway. Sealing materials shall be in conformance with Section 502-4.9. All removal, sawing, expansion joints, dowels, reinforcing steel or drilled in dowels, sealing of joints, and subgrade preparation shall be considered incidental to bid price for Driveway Repair.

602-3.15 CONCRETE QUALITY CONTROL AND SUBGRADE TESTING. Testing shall conform to Section 501-3.4. Payment shall be considered incidental to other bid items.

602-4 MEASUREMENT AND PAYMENT

602-4.1 6-INCH CONCRETE DRIVEWAY. Six-inch concrete driveway shall be measured by the square foot (SF) and paid for at the unit price bid for "6-Inch Concrete Driveway" complete in place and accepted by the ENGINEER.

602-4.2 8-INCH CONCRETE DRIVEWAY. Eight-inch concrete driveway shall be measured by the square foot (SF) and paid for at the unit price bid for "8-Inch Concrete Driveway" complete in place and accepted by the ENGINEER.

602-4.2A 8-INCH CONCRETE REMOVAL. Eight-inch or thicker concrete removed and disposed of shall be measured by the square foot (SF) and paid for at the unit price bid for "8-Inch Concrete Removal." All 8-inch or thicker concrete removed shall be disposed of in accordance with Subsection 501-3.16.

602-4.3 DRIVEWAY REMOVAL. Driveway removed and disposed of shall be measured by the square foot (SF) and paid for at the unit price bid for "Driveway Removal." All driveway removed which is less than 8 inches in thickness will be paid for

under this item. All driveway removed which is 8 inches or more in thickness will be paid for under Section 602-4.2A "8-Inch Concrete Removal."

602-4.4 SLABJACKING 6-INCH CONCRETE DRIVEWAYS. Slabjacking 6-inch concrete driveways and sidewalk shall be measured by the square foot (SF) and paid for by the unit price bid for "Slabjacking 6-Inch Concrete" complete in place and accepted by the ENGINEER.

602-4.5 SLABJACKING 8-INCH CONCRETE DRIVEWAYS. Slabjacking 8-inch concrete driveways and sidewalk shall be measured by the square foot (SF) and paid for by the unit price bid for "Slabjacking 8-Inch Concrete" complete in place and accepted by the ENGINEER.

602-4.6 DRIVEWAY REPAIR. Driveway repair shall be measured by the square foot (SF) and paid for by the unit price bid for “Driveway Repair” complete in place and accepted by the ENGINEER.

SECTION 603 – CONCRETE CURB AND COMBINED CURB AND GUTTER

603-1 DESCRIPTION

This work shall consist of the construction of Air-Entrained Portland Cement Concrete Standard Curb, Combined Curb and Gutter with 6-inch or 8-inch gutters sections, and, Mountable Curb and Gutter, and Curb and Gutter Repair in accordance with these specifications and standard details at the locations and to the lines and grades shown on the plans or as directed by the ENGINEER.

This work shall also include the removal of old curbing and curb and gutter when listed on the proposal, as shown on the plans, or as directed by the ENGINEER.

603-2 MATERIALS

603-2.1 Materials shall meet the requirements of Subsection 501-2.

603-3 CLASSIFICATION

603-3.1 STANDARD CURB. The curb constructed under the designation shall be one course unreinforced or reinforced concrete construction as shown on the standard details. All curbing constructed on a straight line or on a curve shall be considered standard curb.

603-3.2 STANDARD CURB AND GUTTER. The work to be completed under this item shall be one course reinforced or unreinforced concrete construction as shown on the standard details as a combined curb and gutter section or 8-inch gutter section (8-inch gutter section shall be used in all commercial sites). All curb and gutter constructed on a straight line or on a curve shall be considered as standard curb and gutter.

603-3.3 MOUNTABLE CURB AND GUTTER. The work to be completed under this item shall be one course reinforced or unreinforced concrete construction as shown on Standard Details as a combined mountable curb and gutter section. All mountable curb and gutter constructed on a straight line or on a curve under this item shall be classified as mountable curb and gutter.

603-3.4 CURB AND GUTTER REPAIR. The work to be completed under this item shall conform to Subsections 603-3 and 603-4.

603-4 CONSTRUCTION REQUIREMENTS

Construction requirements shall conform to Subsection 501-3 with the following additional provisions:

603-4.1 GENERAL. The curb and curb and gutter constructed under this item shall be one course concrete construction.

When curb and gutter sections are removed for repairs or new construction of driveways or a valley gutter, the curb and gutter shall be removed to the nearest joint. If the existing curb is cracked, the cracked joint shall be sawed. The sawed joint shall be no closer than 5 feet to the existing joint in place. All jagged joints shall be sawed.

When new curb and gutter is installed, and ends do not tie into an existing curb, the ends of the curb and gutter shall have the curb tapered down from 6 inches to 1 inch for 2 feet in length which shall be paid for as standard curb and gutter..

603-4.2 FORMS. Forms for use on curves shall be capable of installation to within1/2 inch of the true curve, and if the radius is less than 400 feet, they shall be either flexible material or shaped to fit the curve. On small radius curves such as driveways and street intersections, the CONTRACTOR may use masonite or equal, metal, or 1/2 inch dimension lumber.

603-4.3 DOWEL BARS. All dowel bars as detailed shall be considered incidental to each item of curb or curb and gutter construction.

603-4.4 DOWELED EXPANSION JOINTS. Doweled expansion joints shall consist of two (2) dowels and one (1) expansion boot, three (3) reinforcement bars, and one (1) expansion boot in accordance with Subsections 501-2.8 "Expansion Joint Material" ~~and~~ or 501-2.10 "Reinforcing Steel." Doweled expansion joint boot shall be ½ to ¼ inch lower than the surfaces of the top of the curb and gutter.

One (1) doweled expansion joint shall be placed every 100 feet on any new or repaired curb and gutter sections and at both ends of street intersection radii.

Every attempt should be made to center or position the doweled expansion joint to improve the overall appearance of the curb and gutter section.

603-4.5 SURFACE FINISH. The final surface finish shall be obtained by uniformly brushing or brooming the surface. No plastering will be permitted.

603-4.6 BACKFILL. The curbing shall be backfilled within 14 days of placement to a level width of at least 2 feet along the front of the gutter and back of the curb to a height equal to the top finished grade of the curbing. The backfill shall be compacted in accordance with Section 202 "Excavation and Embankment."

603-4.7 CONTRACTOR'S STAMP OR NAME PLATE. CONTRACTOR shall mark every 100 LF for continuous pours of new curb and gutter laid, and every curb and gutter patch done per city lot, by stamping or by inlaying an approved metal plate conforming to Subsection 501-3.15.

603-4.8 CURB OR CURB AND GUTTER REMOVAL. All curb or curb and gutter removed shall be disposed of in accordance with Subsection 501-3.16.

603-4.9 CURB AND GUTTER EXTRUSION MACHINE. This type of machine shall be capable of producing concrete curb, curb and gutter, or mountable curb and gutter to conform to the requirements of this section and line, grade, shape, and dimensions given in the plans and specifications or approved by the ENGINEER using materials conforming to the specifications.

The CONTRACTOR shall provide the ENGINEER with the following information prior to being given permission to produce a test section with the machine:

1. Complete machine specifications regarding the machine and its performance.

2. Details of the proposed section of curb or curb and gutter to be produced by the Machine.

3. Provide evidence of having previous experience of operating and maintaining the proposed machine.

If the above items are found to be satisfactory to the ENGINEER, written permission will be given to the CONTRACTOR to provide a 100-foot test section in place with the proposed machine.

If the manufacture of the test section and the performance of the extrusion machine prove to be satisfactory, the ENGINEER shall then issue final written approval to the CONTRACTOR. If during the course of construction on the project said manufacture and said performance becomes unsatisfactory, the ENGINEER shall disallow the continued use of said machine.

603-4.10 SEALING JOINTS. All expansion joints shall be sealed in accordance with Subsections 501-3.22 and 501-2.9.

603-4.12 SLABJACKING. Curb and gutter and curb with 8-inch gutter. Slab jacking curb and gutters shall be in accordance with Subsection 601-3.6.

603-4.13 CURB AND GUTTER REPAIR. This item shall include standard curb and gutter (8-inch or 6-inch gutter) and Standard Curb removed and replaced. Curb and gutter removed shall be removed to the closest joint. If the curb is cracked, a joint shall be sawed. The joint shall be no closer than 5 feet to the existing joint in place. All joints not broken adjacent to the repair shall be sawed.

Curb and gutter shall be drilled and #4 12-inch deformed bar or dowel bar installed once at 6 inches below and parallel to the top of the curb surface, and two more times 12 inches apart centered parallel and mid-depth to the gutter surface. Depth of the drill shall be no less than 6 inches. Expansion joint boots shall be installed on the curb and gutter at the discretion of the ENGINEER. When expansion joint boots are installed, the boot shall be installed one-half inch lower than the surface of the top of the curb and the gutter surface to allow for sealant. All subgrade preparation, sawing, expansion joint

boots, dowels, reinforcing steel, drilled-in dowels, and sealing shall be considered incidental to the bid price for Curb and Gutter Repair.

603-4.15 CONCRETE QUALITY CONTROL AND SUBGRADE TESTING. Testing shall meet the requirements of Section 501-3.4. Payment shall be considered incidental.

603-5 MEASUREMENT AND PAYMENT

603-5.1 CURB AND GUTTER REPAIR. Measurement and payment shall be per linear foot (LF) of Curb and Gutter Repair for curb and gutter removed (incidentally), replaced, sealed, and accepted by the ENGINEER.

603-5.2 STANDARD CURB. Standard Curb shall be measured by the linear foot (LF) and paid for at the unit price bid for "Standard Curb" complete in place and accepted by the ENGINEER.

603-5.3 STANDARD CURB AND GUTTER. Standard Curb and Gutter shall be measured by the linear foot (LF) and paid for at the unit price bid for "Standard Curb and Gutter" complete in place and accepted by the ENGINEER. When reinforcing steel is required, the reinforcing steel shall be considered incidental.

603-5.4 CURB AND GUTTER (8-INCH GUTTER). Curb and Gutter (8-Inch Gutter) shall be measured by the linear foot (LF) and paid for at the unit price bid for "Curb and Gutter (8-Inch Gutter)", complete in place and accepted by the ENGINEER. When reinforcing steel is required, the reinforcing steel shall considered incidental.

603-5.5 MOUNTABLE CURB AND GUTTER. Mountable curb and gutter shall be measured by the linear foot (LF) and paid for at the unit price bid for "Mountable Curb and Gutter" complete in place and accepted by the ENGINEER. When reinforcing steel is required, the reinforcing steel shall be considered incidental.

603-5.6 CURB AND GUTTER REMOVED. Curb and curb and gutter removed shall be measured by the linear foot (LF) and paid for at the unit price bid for "Curb and Gutter Removed" complete in place and approved by the ENGINEER.

603-5.7 SLABJACKING STANDARD CURB AND GUTTER. Slabjacking standard curb and gutter shall be measured by the linear foot (LF) and paid for at the unit price bid for "Slabjacking Standard Curb and Gutter" complete in place and accepted by the ENGINEER.

603-5.8 SLABJACKING CURB AND GUTTER (8-INCH GUTTER). Slabjacking curb and gutter (8-Inch Gutter) shall be measured by the linear foot (LF) and paid for by the unit price bid for "Slabjacking Curb and Gutter (8-Inch Gutter)" complete in place and accepted by the ENGINEER.

SECTION 700

STRUCTURES

SECTION 701 – STRUCTURAL PORTLAND CEMENT CONCRETE

701-1 DESCRIPTION

This item shall consist of either reinforced or non-reinforced structural portland cement concrete, prepared and constructed in accordance with these specifications at the locations and of the form and dimensions shown on the plans. The concrete shall be composed of coarse aggregate, fine aggregate, portland cement, admixtures, and water.

701-2 MATERIALS

701-2.1 GENERAL. Only approved materials conforming to the requirements of these specifications shall be used in the work. They may be subject to inspection and tests at any time during the progress of their preparation or use. The source of supply of each of the materials shall be approved by the ENGINEER before delivery or use. Representative preliminary samples of the materials shall be submitted by the CONTRACTOR, when required, for examination and test. Materials shall be stored and handled to insure the preservation of their quality and fitness for use and shall be located to facilitate prompt inspection. All equipment for handling and transporting materials and concrete must be clean before any material or concrete is placed therein.

Identify an acceptable concrete wash out area(s). Dumping concrete or concrete waste within the CITY's right-of-way or easements including the storm water system or on adjacent properties is prohibited without the written consent of the CITY or the affected property owner.

In no case shall the use of pit-run or naturally mixed aggregates be permitted. Naturally mixed aggregate shall be screened and washed, and all fine and coarse aggregates shall be stored separately and kept clean. The mixing of different kinds of aggregates from different sources in one storage pile or alternating batches of different aggregates will not be permitted.

Prior to construction, the CONTRACTOR shall submit for approval by the ENGINEER a Certified Analysis of materials listed in Sub-Section 701-2.2, 701-2.7 and 701-2.8.

701-2.2 PORTLAND CEMENT. The cement used in the work shall be Air Entrained Portland Cement, Type 1A, meeting the requirements of ASTM C150 or Portland Cement, Type 1, meeting the requirements of ASTM C150 with admixtures for producing air entrainment meeting the requirements of ASTM C260.

701-2.3 AGGREGATE. The CONTRACTOR shall notify the ENGINEER of the source of the coarse and fine aggregate which is proposed for use on the contract. Sufficient time shall be allowed so that sampling and testing can be completed prior to the beginning of construction. During the construction period, the CONTRACTOR shall at all times make available to the ENGINEER sampling of aggregate. All aggregate shall meet the requirements of these specifications.

701-2.4 COARSE AGGREGATE. Except as noted herein, the coarse aggregate used shall conform to the requirements of ASTM C33. Coarse aggregate shall consist of gravel or broken stone composed of strong, hard, durable, uncoated pebbles or rock fragments washed clean and free from injurious amounts of shale, coal, clay, lumps, soft fragments, dirt, glass, organic or any other deleterious substances.

Coarse aggregate shall be graded from coarse to fine within one of the following limits when tested in conformity with ASTM C136. Either gradation may be used, but once adopted, no change in gradation will be made during the course of the work.

COARSE AGGREGATE SIZE

Square Mesh	Percent by Weight Passing	Percent by Weight Passing
2"		
1½"	100	
1"	95-100	100
3/4"		90-100
1/2”	25-60	
3/8”		20-55
No. 4	0-10	0-10
No. 8	0-5	0-5
No. 200	0-1	0-1

701-2.5 FINE AGGREGATE. Except as noted herein, the fine aggregate shall conform to the requirements of ASTM C33. Fine aggregate shall be natural sands washed clean consisting of hard, strong, sharp uncoated grains free of dust, lumps, mica, shale, organic matter or other deleterious substances.

Fine aggregate shall be graded within the following limits when tested to conformity with ASTM C136.

FINE AGGREGATE SIZE

SQUARE MESH SIEVE SIZE	PERCENT BY WEIGHT PASSING	SQUARE MESH SIEVE SIZE	PERCENT BY WEIGHT PASSING
MORTAR SAND		CONCRETE SAND	
No. 4	100	3/8”	100
No. 8	95-100	No. 4	95-100
		No. 8	80-100

		No. 16	50-85
		No. 30	25-60
		No. 50	5-30
No. 100	25 (max.)	No. 100	0-10
No. 200	10 (max.)		

The quality, sampling, and testing of mortar sand for use in cement mortar shall conform to ASTM C144.

701-2.6 WATER. Water use in mixing concrete shall be clean and shall not contain deleterious amounts of acids, alkalies, or organic materials. Water shall be subject to testing and approval by the ENGINEER.

701-2.7 ADMIXTURES. Substances other than cement, water, aggregates, and air-entraining agents shall not be used in the concrete except as otherwise required or when permitted in writing by the ENGINEER. Unless otherwise provided in the plans or Special Provisions, no reduction will be made in the specified cement content of the concrete mixture by reason of using any admixtures. Admixtures containing calcium chloride must be preapproved. No admixture shall be used which interferes with proper control or the entrained air content of concrete. Permission to use any admixtures may be withdrawn at any time if the properties of the admixture are not uniform or if satisfactory results are not being obtained.

Should the CONTRACTOR request and obtain permission to use admixtures for its own benefit, no additional compensation will be allowed for the cost of furnishing the admixtures and incorporating them into the concrete mixture.

Should the ENGINEER direct the CONTRACTOR to use admixtures when their use is not required by these Specifications or by the Plans or Special Provisions, furnishing the admixtures and incorporating them into the concrete mixture will be paid for as extra work as provided in Section 126.

701-2.8 REINFORCING STEEL. Reinforcing steel except as otherwise specified shall be Grade 60 deformed bars rolled from billet stock and shall conform to the requirements of ASTM A615.

Dowel bars shall be intermediate grade plain bars rolled from billet stock and shall conform to the requirements of ASTM A663 or A675.

Wire mesh reinforcement shall comply with the requirements of ASTM A185.

Approved type of bar supports and separators shall be used to support reinforcing bars. Premolded concrete blocks may be used at bottom of girders, slabs, or similar locations where the weight of the reinforcing is heavier than average. Bar spacers shall be used between layers of bars. The spacers shall be constructed of steel and must be of sufficient strength and spaced to support the load without distortion. Steel bar spacers shall not come in contact with the forms.

Approved type of bar supports and separators shall be used to support reinforcing bars. Premolded concrete blocks may be used at bottom of girders, slabs or similar locations where the weight of the reinforcing is heavier than average. Bar spacers shall be used between layers of bars. The spacers shall be constructed of steel and must be of sufficient strength and spaced to support the load without distortion. Steel bar spacers shall not come in contact with the forms.

Tie wire shall be No. 16 gauge annealed wire. Reinforcing steel shall be incidental to "Structural Portland Cement Concrete."

701-3 CONSTRUCTION REQUIREMENTS

701-3.1 GENERAL. The CONTRACTOR shall furnish all labor, materials, and services necessary for and incidental to the completion of all work as shown on the drawings and specified herein. All machinery and equipment owned or controlled by the CONTRACTOR shall be of sufficient size to meet the requirements of the work and shall produce satisfactory work. All work shall be subject to the inspection and approval of the ENGINEER. The CONTRACTOR shall employ at all times a sufficient force of workmen of such experience and ability that the work can be completed in a satisfactory and workmanlike manner.

701-3.2 MATERIALS STORAGE

(a) Portland Cement. Portland Cement shall be stored as specified in ASTM C150. The Portland Cement shall be stored in such manner as to permit easy access for proper inspection and identification of each shipment and in a suitable weather tight building that will protect the Portland Cement from becoming damp and minimize warehouse set. Storage shall be of such capacity to provide ample space for consignments of cement as may be required to carry on the work in accordance with the approved progress schedules.

(b) Aggregates. Aggregates shall be stored in such a manner as to afford good drainage, prevent the intrusion of foreign matter, and preserve the gradation. Any material which has deteriorated or which has been damaged shall not be used for concrete.

To avoid changes in consistency, the aggregates shall be obtained from a source which will insure uniform quality and grading during any single day's operation, and they shall be delivered to the project and handled in such a manner that variations in moisture content will not interfere with the steady production of concrete of uniform quality and consistency.

701-3.3 ADVANCE DESIGN OF CONCRETE MIXES. Designs and tests for each concrete mix to be used under this contract shall be made, using aggregates which have been approved for this work. Except as otherwise specified, mixes shall be designed in accordance with ACI 613 to attain the required strengths using the various

slumps (including the maximum allowable), the various sized aggregates expected to be used in the work and the admixtures as called for by the ENGINEER. The concrete mixes shall be designed by an independent testing laboratory and paid for by the CONTRACTOR.

Advance tests of each of the proposed mixes shall be made in accordance with ASTM C192. Six (6) standard six inch (6") diameter compression test cylinders shall be made for each mix design, three (3) shall be tested at seven (7) days and three (3) at twenty-eight (28) days. Concrete tested shall contain all required and/or proposed admixtures and in addition to the testing required by ASTM C192 shall be tested for air content by ASTM C231.

The advance mix designs and the results of tests on cylinders made from advance mix designs are required before work of concrete placing is started.

Tests for aggregates, as required in Sub-Section 701-2.3, may be made a part of these tests if suitably referenced on the reports which shall be issued at seven (7) and twenty-eight (28) days.

The above tests shall be repeated if necessary because of changes in materials or unsatisfactory results.

701-3.4 CONCRETE TESTING. During the progress of the work and for each different mix of concrete, the following sets of standard diameter compression test cylinders shall be cast in the field in accordance with ASTM C31 and ASTM C172 for each sample taken:

First Pour - Two (2) 7-day and two (2) 2-day cylinders.

Intermediate Pours as follows:

1-25 CY - Two (2) 28-day cylinders
25-50 CY - Three (3) 28-day cylinders
50-75 CY - Four (4) 28-day cylinders
75-100 CY - Five (5) 28-day cylinders
100-150 CY - Six (6) 28-day cylinders
150-200 CY - Eight (8) 28-day cylinders

The cylinders, comprising one set, shall be made from the same sample of concrete. The required minimum strength of the concrete shall be 4000 lbs./sq. in. at twenty-eight (28) days.

Slump tests made in accordance with ASTM C143 shall be made as necessary to maintain desired concrete consistency. Slump tests shall also be made and recorded for each sample of concrete used in making test cylinders. The maximum allowable slump of the concrete mix shall be three inches (3”). Air content in accordance with ASTM C231 shall also be tested and recorded for each sample of concrete used in

making test cylinders. The air content shall fall within the range of five percent to seven percent (5%-7%).

If any test cylinder shows a strength at twenty-eight (28) days which fails to meet the specified strength for the class of concrete from which the sample was taken, then the concrete represented by such test cylinder shall be further tested by the ENGINEER. If such further tests indicate that concrete has been placed which does not meet the compressive strength requirements established by this specification, then the concrete shall be rejected and shall be removed and replaced with new concrete of the specified strength, at the expense of the CONTRACTOR. The CONTRACTOR shall also pay for all additional testing required.

701-3.5 PROPORTIONING MATERIALS. Concrete shall be composed of Portland Cement, fine aggregate, coarse aggregate, water and admixtures as specified. The mix shall be designed in accordance with Sub-Section 701-3.3 of these specifications.

The amount of water specified shall include the surface moisture carried by the aggregate at the time of mixing. The amount of water shall be determined by tests made by the CONTRACTOR and the quantity of mixing water to be added to the batch shall be added to that found to be carried by the aggregates, to total the rate specified. The number of tests required and the consequent changes in the amount of mixing water to be added will depend on the control exercise in the gradation and moisture contents of the aggregate.

The amount of water shall also include that liquid added to the batch in the form of admixtures.

The amounts and proportions of fine and coarse aggregates to be used in each mix shall be such as to produce a plastic, workable mix, free from harshness, which can be readily placed into the corners and angles of the forms and around reinforcement and other embedded work without undue accumulation of water or laitance on the surface, and such that there will be no honeycombing in the structure.

Proportions of fine and coarse aggregates shall be such that the ratio of the coarse to the fine aggregate shall no be less than one (1) nor more than two (2). On all work under these specifications, a cubic yard (CY) of concrete shall contain not less than six (6) sacks (564 lbs.) of cement.

701-3.6 BATCHING AND MIXING CONCRETE. Mixing of concrete shall be done in a rotary batch mixer of a type acceptable to the ENGINEER. The volume of the mixed material for each batch shall not exceed the manufacturer's rated capacity of the mixer.

The batch materials shall be delivered to the mixer measured accurately to the required proportions and shall be mixed continuously for not less than one and one-half minutes after all materials including water are in the mixer, during which time the mixer shall rotate at the speed recommended by the manufacturer. The entire batch shall be

discharged before recharging the mixer. The mixer shall be cleaned as required to insure adequate and complete mixing.

In lieu of jobsite mixing, ready mixed concrete meeting requirements specified herein and all applicable requirements of ASTM C94 may be approved, provided the quantity and rate of delivery materials will be such as to permit unrestricted progress of the work in accordance with the placing schedule. When air temperatures are above 90°F, the concrete shall be discharged within one (1) hour. When air temperatures are below 90°F, the concrete shall be discharged within a maximum of one and one-half (1½) hours or 300 revolutions of the drum whichever comes first after the introduction of the mixing water to the cement and aggregates.

Truck mixers shall be equipped with a means by which the number of revolutions of the drum, blades or paddles may be readily verified.

Two (2) copies of the complete data concerning mixing and transportation methods shall be submitted to the ENGINEER for approval.

701-3.7 COLD WEATHER. When the temperature is below 40°F for more than three (3) days or when there is a probability that such temperatures will occur during the 24 hour period after placing, special provisions shall be taken. Except as otherwise specified, mixing, placing and protection shall be in accordance with the latest edition of the Portland Cement Association manual entitled "Design and Control of Concrete Mixtures." Curing shall be as specified in Sub-Section 701-3.17.

Frozen concrete shall be immediately removed upon direction of the ENGINEER and replaced with new concrete at no expense to the Owners.

In order to maintain the temperature specified, the concrete shall be entirely enclosed with tarpaulins, polyethylene plastic sheets, commercial insulating blanket or bat insulation and all fuel and suitable heating equipment and the necessary labor and supervision shall be furnished. Unvented heaters shall not be used. Only commercial insulating blanket or bat insulation will be permitted as a covering without addition of heat. Full responsibility for the protection of the concrete shall be under this section.

During freezing weather, temperature records shall be kept by the CONTRACTOR and furnished to the ENGINEER daily showing the temperature at four (4) hour intervals of the outside air, of the air in the coldest part of the enclosure near the concrete, of the concrete as it is placed, and of the concrete in place at such points as the ENGINEER may direct.

701-3.8 HOT WEATHER. Concrete materials shall be placed at the lowest practicable temperature except as specified in Sub-Section 701-3.7 for cold weather. When hot weather conditions exist that would seriously impair the quality and strength of the concrete, the concrete shall be placed in accordance with the latest edition of the Portland Cement Association Manual entitled "Design and Control of Concrete Mixtures" except as otherwise specified herein.

During hot weather conditions, the temperature of the concrete immediately before it is placed in the forms shall be between 50°F and 90°F.

Shaved ice may be used in the mixing water to reduce the temperature of the concrete at the mixer, but there shall be no ice in the concrete when it is discharged from the mixer.

Retarder admixes shall not be used to control the setting time of the concrete.

701-3.9 FORMS. Concrete shall not be placed until all the forms and reinforcements have been inspected and approved by the ENGINEER. Forms shall be of suitable material and shall be of the type, size, shape, quality and strength to build the structure as designed on the plans. The forms shall be true to line and grade and shall be mortar-tight and sufficiently rigid to prevent displacement and sagging between supports. The CONTRACTOR shall bear responsibility for their adequacy. The surfaces of forms shall be smooth and free from irregularities, dents, sags, and holes. The CONTRACTOR shall obtain approval before framing openings in structural members which are not indicated on the Drawings.

The internal ties shall be arranged so that when the forms are removed, no metal will show in the concrete surface or discolor the surface when exposed to weathering. All forms shall be coated with a non-staining mineral oil which shall be applied shortly before the concrete is placed. Forms shall be constructed so that they can be removed without damaging the concrete or concrete surface. Forms supported by falsework under slabs, beams, girders, arches, and similar construction shall not be removed until tests indicate that at least sixty percent (60%) of the design strength of the concrete has developed.

701-3.10 PLACING REINFORCEMENT. All reinforcement shall be accurately placed as shown on the plans and shall be firmly held in position during concreting. Bars shall be fastened together at intersections. The reinforcement shall be supported by approved metal chairs. Shop drawings, lists, and bending details shall be supplied by the CONTRACTOR when required.

701-3.11 EMBEDDED ITEMS. Before placing concrete, any items that are to be embedded shall be firmly and securely fastened in place as indicated. All such items shall be clean and free from rust, scale, oil, or any foreign matter. The embedding of wood shall be avoided. The concrete shall be consolidated around and against embedded items.

701-3.12 PLACING CONCRETE. All concrete shall be placed during daylight, unless otherwise approved. The concrete shall not be placed until the depth and character of foundation, the adequacy for forms and falsework, and the placing of the steel reinforcing have been approved. Concrete shall be placed as soon as practical after mixing and in no case later than one and one-half (1½) hour after water has been added to the mix as specified in Sub-Section 701-3.6. The method and manner of the placing

shall be such to avoid segregation and displacement of the reinforcement. Troughs, pipes, and chutes shall be used as an aid in placing concrete when necessary. Dropping the concrete a distance of more than five feet (5') or depositing a large quantity at one point, will not be permitted. Concrete shall be placed upon clean surfaces free from running water or upon properly consolidated damp soil.

The concrete shall be consolidated by suitable mechanical vibrators. When necessary, vibrating shall be supplemented by hand spading with suitable tools to assure proper and adequate consolidation. Vibrators shall be manipulated so as not to displace reinforcement or forms. The vibration at any point shall be of sufficient duration to accomplish consolidation but shall not be prolonged to the point where segregation occurs. Concrete deposited under water shall be carefully placed in a compact mass in its final position by means of a tremie, a closed bottom bump bucket, or other approved method and shall not be disturbed after being deposited.

701-3.13 CONSTRUCTION JOINTS. When the placing of concrete is suspended, necessary provisions shall be made for joining future work before the placed concrete takes its initial set. For the proper bonding of old and new concrete, such provisions shall be made for grooves, steps, keys, dovetails, reinforcing bars or other devices as may be prescribed. The work shall be arranged so that a section begun on any day shall be finished during daylight of the same day. Before depositing new concrete on or against concrete which has hardened, the surface of the hardened concrete shall be cleaned, thoroughly wetted, and given a thin coating of neat cement mortar.

701-3.14 EXPANSION JOINTS. Expansion joints shall be constructed at such points and of such dimensions as may be indicated on the drawings. The premolded filler shall be cut to the same shape as that of the surfaces being joined. The filler shall be fixed firmly against the surface of the concrete already in place in such manner that it will not be displaced when concrete is deposited against it.

701-3.15 DEFECTIVE WORK. Any defective work disclosed after the forms have been removed shall be immediately removed and replaced. If any dimensions are deficient, or if the surface of the concrete is bulged, uneven, or shows honeycomb, which in the opinion of the ENGINEER cannot be repaired satisfactorily, the entire section shall be removed and replaced at the expense of the CONTRACTOR.

701-3.16 SURFACE FINISH. All exposed concrete surfaces shall be true, smooth, free from open or rough spaces, depressions, or projections. The concrete in horizontal plane surfaces shall be brought flush with the finish top surface at the proper elevation and shall be struck-off with a straightedge and floated.

When directed, the surface of exposed concrete shall be a rubbed finish. If forms can be removed while the concrete is still green, the surface shall be wetted and then rubbed with a wooden float until all irregularities are removed. If the concrete has hardened before being rubbed, a carborundum stone shall be used to finish the surface. When approved, the finishing can be done with a rubbing machine.

701-3.17 CURING AND PROTECTION. All concrete shall be properly cured and protected by the CONTRACTOR. The work shall be protected from the elements, flowing water, and from defacement of any nature during the building operations. The concrete shall be cured as soon as it has sufficiently hardening by covering with an approved material. Water-absorptive coverings shall be thoroughly saturated when placed and kept saturated for a period of at least three (3) days. All curing mats or blankets shall be sufficiently weighted or tied down to keep the concrete surface covered and to prevent the surface from being exposed to currents of air.

Traffic shall not be allowed on concrete surfaces until tests indicate that sufficient strength has been reached.

701-3.18 DRAINS OR DUCTS. Drainage pipes, conduits, and ducts that are to be encased in concrete shall be installed by the CONTRACTOR before the concrete is placed. The pipe shall be held rigidly so that it will not be displaced or moved during the placing of the concrete.

701-3.19 FILLING JOINTS. All joints which require filling shall be thoroughly cleaned, and any excess mortar or concrete shall be cut out with proper tools. Joint filling shall not be started until after final curing and shall be done only when the concrete is completely dry. The cleaning and filling shall be carefully done with proper equipment and in a manner to obtain a neat looking joint free from excess filler.

701-3.20 SEALING JOINTS. Joints shall be sealed per details or as directed by the Engineer.

Joints shall be filled with joint-sealing material within fourteen (14) days of construction. Prior to sealing, each joint shall be thoroughly cleaned of all foreign material, including membrane curing compound. Joint faces shall be cleaned and surface-dry when seal is applied. Material for sealing applied hot shall be stirred during heating to prevent localized overheating.

Any excess material on the surface of the concrete shall be removed immediately and the concrete surface cleaned. The use of sand or similar material to cover the seal shall not be permitted. Joint sealing material shall not be placed when the air temperature in the shade is less than 40 degrees Fahrenheit, unless approved by the ENGINEER.

701-4 MEASUREMENT AND PAYMENT

701-4.1 STRUCTURAL PORTLAND CEMENT CONCRETE. Structural Portland Cement Concrete shall be measured by the cubic yard (CY) computed in place from plan dimensions with no deductions made for volumes of steel or embedded items. Payment will be made at the unit price bid for "Structural Portland Cement Concrete" complete in place and accepted by the ENGINEER.

SECTION 800

SEWERS

SECTION 801 - SANITARY SEWERS

801-1 DESCRIPTION

This item shall consist of pipe of the types, classes, sizes, and dimensions required on the plans, furnished and installed at the places designated on the plans and profiles or by the ENGINEER in accordance with these specifications and with the lines and grades given.

The bid price per linear foot of pipe in place shall include the cost of excavation and backfill, the cost of furnishing and installing all trench bracing, all fittings required to complete the sewer pipe, as shown on the plans, and the material for and the making of all joints, including all connections to existing sewer pipe and manholes.

"Unstable," "Suitable," "Unsuitable," and "Unsatisfactory" soil or aggregate items shall be defined as stated in Section 202.1.

801-2 MATERIALS

801-2.1 GENERAL. The pipe shall be of the type selected by the CONTRACTOR and shall be in accordance with the following appropriate requirements unless otherwise specified.

801-2.2 CONCRETE SANITARY SEWER PIPE. Concrete sanitary sewer pipe, reinforced, shall conform to the requirements of ASTM C76.

801-2.3 POLYVINYL CHLORIDE SANITARY SEWER PIPE. Polyvinyl chloride sanitary sewer (PVC) pipe 15 inches or smaller shall conform to the requirements of ASTM D3034 for type PSM, PVC sewer pipe and fittings and shall have an SDR of 35, all of which shall be stamped on the pipe. Polyvinyl chloride sewer pipe 18” or larger shall conform to the requirements of ASTM F679-PS46. PVC sewer main line pipe and PVC sewer service pipe shall have the elastomeric gasket type joint providing a watertight seal. A solvent cement type joint will not be allowed. PVC Wye branches shall be of the "factory assembled type."

801-2.4 RUBBER GASKET JOINT FOR CONCRETE SANITARY SEWER PIPE. Rubber-type gaskets for concrete non-pressure pipe shall conform to the requirements of ASTM C443, or ASTM C361.

801-2.5 MORTAR. Mortar for connections to manholes shall be composed of one (1) part, by volume, of Portland Cement and two (2) parts of mortar sand. The Portland Cement shall conform to the requirements of subsection 501-2.2. The sand shall

conform to the requirements of subsection 501-2.5. Hydrated lime may be added to the mixture of sand and cement in an amount equal to 15% of the weight of cement used. The hydrated lime shall meet the requirements of ASTM C6.

801-2.6 PVC SEWER PIPE JOINT CEMENT. Use of PVC sewer pipe joint cement must be approved by the ENGINEER prior to construction. The polyvinyl chloride sewer pipe joint cement shall consist of a viscous brushable solution of polyvinyl chloride in suitable active solvents. The cement shall be purchased from the pipe manufacturer and used in accordance with the manufacturer's instructions. It shall produce a joint of sufficient strength to permit normal installation handling within 5 minutes after jointing when exercising reasonable care.

801-2.7 RUBBER GASKET JOINT FOR PVC SEWER PIPE. Rubber gaskets for PVC sewer pipe joints shall be of the elastomeric type providing a watertight seal and shall conform to ASTM D3212.

801-2.8 CONCRETE. Concrete for pipe cradles and saddles shall conform to the requirements of Section 501.

801-2.9 BEDDING MATERIAL. The bedding material shall consist of granular material in accordance with the requirements for gradation shown in the following table:

Square Mesh Sieve Size	Percent By Weight Passing
2"	100%
1”	90-100%
3/4”	80-100%
No. 4	30-90%
No. 30	10-60%
No. 100	0-15%

One gradation test shall be made for each source and change in material provided for each 500 tons of screened and/or blended material and for each 200 tons of non-screened or “bank run” material. Gradation testing shall be incidental to the pipe or other bid items.

The CONTRACTOR may provide a controlled density fill in lieu of the bedding material bed for underground pipe if approved by the ENGINEER prior to installation. The controlled density fill shall conform to Section 503.

If the controlled density fill is placed in the trench in a plastic state, the remaining backfill may not be completed for 48 hours. One compression test shall be made for each 60 C.Y. of control density fill or a minimum of 1 per day. A testing firm normally engaged in materials testing shall make the test at the expense of the CONTRACTOR. The CONTRACTOR shall remove and replace any material not meeting the requirements at CONTRACTOR's own expense. All controlled density fill shall be designed for easy

removeability should it become necessary to repair or remove the pipe in the future. The pipe shall be protected from floating to maintain line and grade.

Controlled density fill shall be paid as bedding material unless otherwise specified. Controlled density fill utilized on the remainder of the trench may be provided incidental if approved by the ENGINEER.

Bedding quantities are based on trench width in Section 801-3.2 Excavation and Preparation of Trench. Any additional bedding material due to a wider ditch shall be the responsibility of the CONTRACTOR.

801-2.10 SUBCUT GRAVEL. The subcut gravel shall consist of granular material in accordance with the requirements of gradation shown in the following table:

Square Mesh Sieve Size	Percent By Weight Passing
2”	100%
No. 4	0-10%

801-2.11 MARKING TAPE. The CONTRACTOR will be required to furnish and install marking tape located 2 feet above the top of all sanitary sewer mains installed under this contract. The tape shall be of the non-detectable type and shall have a minimum width of 5 inches. The tape shall be green in color with the words "CAUTION SEWER LINE BELOW" imprinted on the tape in black capital letters. The marking tape shall be equal to that manufactured by Griffolyn Company, Inc. standard grade.

Cost of marking tape and installation shall be considered incidental to other items.

801-2.12 SANITARY SEWER FORCEMAIN MATERIALS. All materials for construction of sanitary sewer force mains shall conform to Section 901 Water Mains.

801-3 CONSTRUCTION REQUIREMENTS

801-3.1 EQUIPMENT. All equipment necessary and required for the proper construction of sanitary sewers shall be on the project in first-class working condition and approved by the ENGINEER before construction is permitted to start.

The CONTRACTOR shall handle the pipe while unloading and placing it in its final position without damage to the pipe.

The CONTRACTOR shall provide methods and mean to obtain the required compaction of the pipe bed and the backfill as specified.

The CONTRACTOR shall provide a sufficient number of watertight sewer plugs to prevent infiltration of water and any other foreign material from entering the existing sewer system and the newly constructed sewer lines.

801-3.2 EXCAVATION AND PREPARATION OF TRENCH. The trench shall be dug to the alignment and depth required and only so far in advance of pipe laying as the ENGINEER may permit. The discharge from pumps shall be led to natural drainage channels, drains, or storm sewer.

The trench width may vary depending upon the depth of the trench and the nature of the excavated material, but in any case shall be of ample width to permit the pipe to be laid and joined properly and the backfill to be placed and compacted to the required density. The maximum width of trench for calculating bedding material quantities shall not be more than 48 inches, and for pipe 15 inches or larger no more than 36 inches greater than the outside diameter of the pipe barrel.

The trench shall be excavated below the required grade so that the pipe may be laid on 4 inches of bedding material.

Where the bottom of the trench uncovered at subgrade is unsuitable and in the opinion of the ENGINEER cannot support the pipe, further depth and/or width shall be excavated and refilled to the pipe foundation grade with subcut gravel thoroughly compacted. In this instance, subcut gravel shall be considered a pay item.

If other approved means shall be adopted to assure a firm foundation for the pipe, the CONTRACTOR will be allowed extra compensation. Extra compensation shall not be allowed for extra excavation and gravel used for seepage and ground water control.

If ordered in writing by the ENGINEER, the CONTRACTOR will be paid for any sheathing that the ENGINEER orders left in the trench in order to protect existing utilities or other items. The price to be paid for such sheathing material will be the current invoice price of said materials or such lesser price as the CONTRACTOR and the ENGINEER may agree that the material is worth at the time it is left in the trench.

All broken pavement or sidewalks shall be removed from the site of the work and deposited at a place selected by the ENGINEER. It shall be the responsibility of the CONTRACTOR to remove and replace at its own expense all sidewalk, curb, and gutter necessary for the installation of the pipe and manholes as shown on the plans and as directed by the ENGINEER, unless items are noted on plans. The removal shall be complete to the nearest joint in order that the replacement might be made in a workmanlike manner. No additional compensation will be allowed for this work and shall be included in the price bid for pipe or manhole installation.

All excavated material shall be piled in a manner that will not endanger the work and that will avoid obstructing sidewalks and driveways. Gutters shall be kept clean or otherwise satisfactory provisions made for street drainage.

The use of trench digging machinery will be permitted except in places where operation of same will cause damage to trees, building or existing structures above or below ground, in which case hand methods shall be employed.

The CONTRACTOR is assumed to be familiar with all federal, state and local laws, codes, ordinances, and regulations which in any manner affect those engaged or employed in the work, the material, or equipment used in or upon the site, or in any way affect the conduct of the work. No pleas of misunderstanding or ignorance on the part of the CONTRACTOR will, in any way, serve to modify the provisions of the contract. The CONTRACTOR shall provide and maintain on a 24-hour basis all necessary safeguards such as watchmen, traffic control devices, and night lights at CONTRACTOR's own expense in accordance with subsection 124.

Excavation for pipe laying operations shall be conducted in a manner to cause the least interruption to traffic. Where traffic must cross open trenches, the CONTRACTOR shall provide suitable bridges at street intersections and driveways. Hydrants under pressure, valve boxes, curb stop boxes, and other utility controls shall be left unobstructed and accessible during the construction period.

Adequate provisions shall be made for the flow of sewers, drains, and water courses encountered during construction, and the structures which may have been disturbed shall be satisfactorily restored upon completion of the work.

Prior to making any connections to the existing sewer system, the CONTRACTOR shall furnish and install watertight plugs in such a manner as to prevent infiltration and foreign material from entering the existing sewer system. The plugs shall be installed so as to not disrupt existing sewage flow and shall remain in place until the construction has been accepted by the ENGINEER.

Trees, fences, poles, and all other property shall be protected unless their removal is authorized by the ENGINEER, and any property damages shall be satisfactorily restored by the CONTRACTOR. The cost of removal shall be included in the price bid per linear foot of sewer pipe in place unless listed separately in the proposal. Tree removal and root cutting shall be in conformance with Section 201.

801-3.3 ROCK EXCAVATION. All rock found in the trench area shall be classified as solid rock and measured for payment if each individual rock, boulder, or continuous slab of ledge rock is 1 cubic foot or more in content. Solid rock shall be measured for payment on the basis of and limited to the maximum trench width allowed under subsection 801-3.2, "Excavation and Preparation of Trench." If solid rock extends below the necessary depth of excavation, it shall be measured for payment to a horizontal plane 6 inches below the bottom of the pipe. All rocks smaller in volume than 1 cubic foot shall not be classified as solid rock, but may be used in backfilling as directed by the ENGINEER.

Blasting for excavation will be permitted only after securing the approval of the ENGINEER, and only when proper precautions are taken for the protection of person and property. The hours of blasting will be fixed by the ENGINEER, and any damage caused by blasting shall be repaired by the CONTRACTOR at its own expense. The

CONTRACTOR's methods of procedure relative to blasting shall conform to local and state laws and municipal ordinances.

Whenever ledge rock is encountered, the CONTRACTOR shall strip from the same all overlying earth and he shall then notify the ENGINEER that the rock is ready for measurement. The ENGINEER may then take levels upon the rock or he may at his discretion defer measurement until after the excavation is completed. In any event, the CONTRACTOR shall not refill any trench where rock is encountered until notified by the ENGINEER that measurement has been made. Payment will not be allowed for any rock unless the same shall have been measured as herein provided. The rock shall be excavated to a depth of 6 inches below the bottom of the pipe, and the trench shall be refilled to the proper grade with bedding material.

All rock found in the trench having greater volume of 1 cubic foot shall not be used as backfill but shall be disposed of as directed by the ENGINEER.

801-3.4 PIPE LAYING. All water main and sanitary sewer crossings shall conform to the following policy:

1. Where both water and sewer are of new construction:

    a. No additional protections needed if water main crosses at least 5 feet above the sewer.

    b. If the water main crosses within 3 to 5 feet above the sewer, a full length of water main shall be centered over the sewer.

    c. If the water main crosses within 3 feet above the sewer, a full length of water main shall be centered over the sewer and the sewer joints located within 10 feet of the crossing shall be able to withstand 25 psi internal pressure.

2. Where water main crosses over an existing sewer:

    a. No additional protection needed if water main is at least 3 feet above the sewer. The intervening dirt must be left undisturbed.

    b. If crossing is within 3 feet above sewer, a full length of water main must be centered over the sewer main.

3. Where water main crosses under the sewer:

    a. In all cases, additional protection shall be provided by centering a full length of water main under the sewer main. All sewer joints located within 10 feet of the crossing shall be able to withstand 25 psi internal pressure.

Proper implements, tools, and equipment satisfactory to the ENGINEER shall be provided and used by the CONTRACTOR for the safe and convenient prosecution of

the work. All pipe and fittings shall be carefully lowered into the trench piece by piece by means of a derrick, ropes, or other suitable tools or equipment in such a manner as to prevent damage to the pipe. Under no circumstance shall pipe be dropped or dumped into the trench.

After the trench has been excavated to the proper grade, the first pipe at the outlet end of the sewer shall be bedded to the proper line and grade with the bell end upstream. All pipe shall be laid to line and grade. The pipe shall be held in place by backfilling along the bottom and sides of the pipe section with bedding material thoroughly tamped up to the centerline of the pipe and protected from movement.

During the pipe laying operation, the CONTRACTOR shall have a watertight plug available to install in the last pipe layed at the end of each work day or to install during the work day, to prevent water or other foreign material from entering the newly installed pipe.

The CONTRACTOR shall exercise due care, so as to prevent water and other foreign matter from entering the newly constructed sewer mains at new manhole locations.

All joints shall be installed in accordance with the pipe manufacturer's instructions.

Where polyvinyl chloride sewer pipe is installed in a vitrified clay sewer line, V.C. to P.V.C., adaptors shall be used at each junction. Adapters shall be ~~equal to those~~ Strong Back RC Series repair couplers as manufactured by Fernco, Inc. or approved equal.

The cost of adapters shall be considered incidental to the unit price bid for polyvinyl chloride sewer pipe.

The interior of the pipe shall be cleaned as the work progresses. The manholes and sewer pipe shall be flushed with clean water after completion and prior to acceptance by the ENGINEER.

801-3.5 BACKFILLING OF PIPE TRENCH. After the pipe has been laid to line and grade, the trench shall be backfilled under and along the sides of the pipe up to the centerline of the pipe by thoroughly compacting bedding material into place so as to form a uniform bed for the pipe. The compaction may be obtained by any approved method or equipment which will produce a uniform density meeting the requirement to obtain not less than 85 percent maximum dry density at optimum moisture made in accordance with ASTM D1557. Care shall be exercised not to displace the pipe or injure the pipe during the compaction operations. If the material in the trench is sand or gravel and acceptable to the ENGINEER, it will not be necessary to furnish any other material than that found within the trench to backfill up to the centerline of the pipe. If sand or gravel is not found within the trench, the CONTRACTOR will be required to furnish bedding material. It will be required to keep the bedding completed within 3 lengths of the last pipe being laid and shall all be completed at the end of each day's work. After bedding operations, the trench shall be backfilled to a point two (2) feet

above the top of the pipe by any approved method or equipment which will produce a uniform density meeting the requirements to obtain not less than 80 percent of the maximum dry density at optimum moisture as determined by ASTM Compaction Control Test Designation D1557. The use of drop pile hammers, loaded or unloaded clam shells or backhoe buckets, or other similar equipment will not be permitted to obtain the required density below a point two (2) feet above the top of the pipe. The CONTRACTOR shall use specialized equipment or hand tamping around appurtenances such as manholes to insure proper density. The remaining trench shall be backfilled in accordance with the specifications for the class of backfill as set forth in subsection 801-3.6. The areas for each class of backfill specified shall be designated on the plans.

The CONTRACTOR shall engage an independent soils testing laboratory, approved by the ENGINEER, to determine the soil moisture density relationships and perform the required compaction testing to be determined by the ENGINEER.

The compaction control tests for this section are based on one individual compaction test per 300 feet of trench per 30 inches of backfill and a minimum of one (1) test per service line, 2 feet below finish grades or where directed. The CONTRACTOR shall be responsible for all retesting of failing tests and a proctor determination to represent each soil condition to be encountered on the project. The time, locations, depths, and frequency of compaction testing shall be at the discretion of the ENGINEER during construction. Should it become necessary to require an additional number of initial compaction tests, over and above the number specified for bidding purposes, the CITY OF BISMARCK will assume the responsibility to perform said additional testing. The CONTRACTOR, however, will be required to assume the cost of all retesting of failing tests regardless of the total number required during construction.

Compaction testing to determine densities may be accomplished with a nuclear density testing apparatus and/or the sand cone method. Should disputes arise concerning test results, they will be resolved by using the sand cone.

Written reports of all test results shall be supplied to the ENGINEER and the CONTRACTOR by the testing laboratory as soon as possible. To expedite construction progress, it is necessary that the CONTRACTOR and ENGINEER be furnished with the results of all tests as soon as testing is completed.

The availability of the independent testing laboratory when needed and speed of testing and reporting are to be considered the responsibility of the CONTRACTOR.

Compaction control tests as stated above shall be incidental to the price bid for 801-4 Sanitary Sewer Pipe.

All excess dirt and rock must be removed from the streets and disposed of at such places as the ENGINEER may direct.

The CONTRACTOR shall restore all shrubbery, fences, sod, or other surfaces disturbed to a condition equal to that before the work began, furnishing all labor and material incidental thereto. If the area cannot be restored to the original line and cross section without the aid of grade stakes, they will be furnished by the ENGINEER at the CONTRACTOR'S expense.

Following the certification of completion by the ENGINEER, the CONTRACTOR shall maintain the surface of unpaved trenches, adjacent curbs and gutters, sidewalks, driveways, shrubbery, fences, sod, or other surfaces disturbed for a period of three months thereafter. All material and labor required for maintenance of the trenches and adjacent structures shall be supplied by the CONTRACTOR and the work done in a manner satisfactory to the ENGINEER. The cost of backfilling and cleanup shall be included in the price per linear foot of sewer pipe in place.

801-3.6 BACKFILL CLASSIFICATIONS. Moisture requirements for the top 4 feet of the trench (below final grade) for classifications AA, A, B, and C at the time of compaction shall not be less then 4 percentage points below the optimum moisture content and not more than that which will permit compaction to the required density. If the soil is unstable, as defined in section 801-1, when compacted to the required density, the soil shall be dried to obtain adequate stability. This may require drying below optimum moisture. The cost of such drying shall be incidental to the bid items.

(a) Class AA Backfill. Class AA backfill shall be used in areas where the trenches fall beneath special improved areas and under special conditions and these areas shall be indicated as class AA backfill and shown on the plans. Under class AA backfill all the excavated material shall be transported to another site and wasted in a workmanlike manner and selected material meeting bedding material specifications shall be imported to the site for backfill material.

After the pipe has been inspected and bedded with bedding material, and upon completion and approval for the initial backfill requirements specified under subsection 801-3.5, the remaining trench shall be backfilled in layers and compacted by any approved method or equipment which will produce a uniform density meeting the requirements to obtain not less than 95 percent maximum dry density at optimum moisture in accordance with ASTM D1557.

(b) Class A Backfill. Class A backfill shall be used in areas where trenches fall beneath improved areas or areas to be improved, and these areas shall be indicated as class A backfill and shown on the plans.

After the pipe has been inspected and bedded with bedding material, and upon completion and approval of the initial backfill requirements specified under subsection 801-3.5, the remaining trench shall be backfilled in layers and compacted by any approved method or equipment which will produce a uniform density meeting the requirement to obtain not less than 85 percent maximum dry density at optimum moisture made in accordance with ASTM D1557, except for the top 4 feet of the trench which shall meet the requirement to obtain not less than 90 percent at maximum dry

density with a moisture content falling within plus or minus 3 percent of the optimum moisture made in accordance with ASTM D1557.

(c) Class B Backfill. Class B backfill shall be used in areas where the trenches fall beneath improved areas or areas to be improved, and these areas shall be indicated as class B backfill and shown on the plans.

After the pipe has been inspected and bedded with bedding material, and upon completion and approval of the initial backfill requirements specified under subsection 801-3.5, the remaining trench shall be backfilled in layers and compacted by any approved method or equipment which will produce a uniform density meeting the requirement to obtain not less than 80 percent of maximum dry density at optimum moisture made in accordance with ASTM D1557 except for the top 4 feet of trench which shall meet the requirement to obtain not less than 85 percent of maximum dry density at an optimum moisture in accordance with ASTM D1557.

(d) Class C Backfill. Class C backfill shall be used in areas where the trenches fall beneath improved areas or areas to be improved, and these areas shall be indicated as class C backfill and shown on the plans.

After the pipe has been inspected and bedded with bedding material, and upon completion and approval of the initial backfill requirements specified under subsection 801-3.5, the remaining trench shall be backfilled in layers and compacted by any approved method or equipment which will produce a uniform density equal to the adjacent undisturbed soil but not to exceed 85 percent of maximum dry density at optimum moisture made in accordance with ASTM D1557.

(e) Class D Backfill. Class D backfill shall be used in unimproved areas. These areas shall be indicated as class D backfill and shown on the plans. After the pipe has been inspected and bedded with bedding material and upon completion and approval of the initial backfill requirements specified under subsection 801-3.5, the remaining trench shall be backfilled in 24-inch to 36-inch layers compacted by any approved method or equipment which will obtain a uniform density.

801-3.7 Protecting Underground and Surface Structures. Temporary support, adequate protection and maintenance of all underground and surface structures, drains, sewers, watermains, service connections for both sewer and water, and other obstructions encountered in the progress of the work shall be furnished by the CONTRACTOR all at their own expense as approved by the ENGINEER.

(a) Deviations Occasioned by Other Utility Structures. Wherever existing utility structures or branch connections leading to main sewer or water mains or other conduits, ducts, pipes, or structures form obstructions to the grade and alignment of the sewer to be laid, they shall be permanently supported, removed, relocated, or reconstructed by the CONTRACTOR through cooperation with the Owner of the utility, structure, or obstruction involved. In those instances where their relocation or reconstruction is impracticable, a deviation from the line and grade will be ordered by

the ENGINEER, and the change shall be made in the manner directed by the ENGINEER.

Wherever possible, all existing utility structures or branch connections leading therefrom will be located in advance of the excavation of the trench and properly marked. The CONTRACTOR shall not cut any existing utility lines unless it is determined by the ENGINEER that it is necessary in order to install the new sewer pipes. All utility lines that are cut by the CONTRACTOR with the approval of the ENGINEER shall be repaired or replaced by the CONTRACTOR as Extra Work. All utility lines that are damaged by the CONTRACTOR shall be repaired or replaced by the CONTRACTOR at the CONTRACTOR's expense.

Wherever the ENGINEER shall determine it is necessary to remove or relocate any existing utility in order to properly install the new sewer pipe, the change shall be made in a manner directed by the ENGINEER and for which extra compensation will be allowed the CONTRACTOR.

(b) DEVIATION WITHOUT ENGINEER'S CONSENT. No deviation shall be made from the required line and grade established by the ENGINEER without the consent of the ENGINEER.

(c) SUBSURFACE EXPLORATIONS. Whenever necessary to determine the location of existing pipes, valves, or other underground structures, the CONTRACTOR, after examination of available records and upon written order from the ENGINEER, shall make all exploration and excavations for such purpose for which the ENGINEER may allow extra compensation.

801-3.8 CIRCULAR DEFLECTION TEST. All fittings and plastic or HDPE pipe of 18 inches in diameter or larger shall be tested by the CONTRACTOR to ensure that circular deflections do not exceed the maximum allowable deflection. Maximum allowable deflections shall be governed by the mandrel requirements stated herein and shall nominally be 5 percent.

The maximum average inside diameter shall be equal to the average outside diameter per applicable ASTM Standards minus two minimum wall thicknesses per applicable ASTM Standards. Manufacturing and other tolerances shall not be considered for determining maximum allowable deflections.

Deflection tests shall be performed not sooner than 30 days after completion of the placement and compaction of the backfill. The pipe shall be clean and inspected for offsets and obstructions prior to testing.

The mandrel shall be pulled through the pipe by hand to ensure that maximum allowable deflections have not been exceeded. Prior to use, the mandrel shall be certified by the ENGINEER. If the mandrel fails to pass through the pipe, it will be deemed to be overdeflected.

Unless otherwise permitted by the ENGINEER, any overdeflected pipe shall be uncovered and, if not damaged, removed and reinstalled. Damaged pipe shall be removed from the work site and replaced with new pipe.

The mandrel shall be a rigid, nonadjustable, 9 leg minimum mandrel having an effective length not less than its nominal diameter. It shall have a minimum diameter, at any point along the full length, as specified by the ENGINEER. The mandrel shall be fabricated of steel and shall have pull rings at either end. The mandrel shall be stamped or engraved indicating the pipe material specification, nominal size and mandrel outside diameter. The maximum average inside diameter of the pipe shall be measured and calculated by the ENGINEER in the field prior to installation.

All costs incurred by the CONTRACTOR attributable to mandrel and deflection testing, including any delays and reinstallation of deflected pipe, shall be considered incidental to other bid items.

801-3.9 TELEVISE SEWER MAIN. All newly constructed sanitary sewer mains shall be televised. If not specified as a bid item, the televising shall be considered incidental to the price bid for the sanitary sewer installation. After flushing the sewer main, under subsection 801-3.4, the CONTRACTOR shall have the sewer main televised and recorded by a firm normally engaged in such type of work. The CONTRACTOR shall provide a high-quality DVD with a report for each section of sewer main televised. The recording shall be clearly marked as to the project number and recording number. The recording shall describe locations and conditions of the sewer and shall have a visual footage counter showing the distance of the camera from the manhole. After the CONTRACTOR has submitted the recordings and report, they will be viewed by the ENGINEER for acceptance.

801-3.10 CLEANOUT. Cleanouts shall be constructed in accordance with the standard detail.

801-3.11 SANITARY SEWER FORCEMAIN. The construction requirements for sanitary sewer forcemains shall comply with Section 901 Watermains, with the exception of the hydrostatic pressure tests, disinfection and bacteriological testing. The hydrostatic pressure test shall be the same as Section 901 Watermains, except the hydrostatic pressure test shall be 125 pounds per square inch and shall be held for two hours. No pipe disinfection or bacteriological testing shall be required.

801-3.12 CONNECTION TO EXISTING SEWER MAIN. Whenever a wye branch is not available for a sewer service connection, the connection to the sewer main shall consist of one of the following:

(a) A “factory assembled” wye branch may be cut into an existing PVC sewer main using gasketed repair couplings to the existing PVC sewer main.

(b) A “factory assembled” wye branch may be cut into an existing VC sewer main using Strong Back Fernco couplings, or an approved equal, to the existing VC sewer main.

(c) PVC, VC, or RC sewer main may be connected to the existing VC sewer main service using an Inserta Tee as manufactured by Inserta Fittings Co. or an approved equal. The City of Bismarck Public Works Department can make the tap into the existing PVC, VC, or RC sewer main. Call for the current price.

801-4 MEASUREMENT AND PAYMENT

801-4.1 thru 4.15 (SIZE) INCH SANITARY SEWER PIPE.

Sanitary sewer pipe shall meet the requirements of Section 801-2.2 and 801-2.3. Sanitary sewer pipe shall be measured by the linear foot (LF) from the centerline of manhole to centerline of manhole and shall be paid for at the unit price bid for "(Size) Inch Sanitary Sewer Pipe" complete in place and accepted by the ENGINEER.

801-4.50 thru 4.59 (SIZE) INCH WYE BRANCH. Wye branches shall be of the same material as the sewer pipe marked with a 2" x 2" x 4' stake placed perpendicular to the mainline sewer at the end of the Wye and measured on an individual unit basis (Ea.) and paid for at the unit price bid for "(Size) Inch Wye Branch" complete in place and accepted by the ENGINEER.

801-4.60 BEDDING MATERIAL. Bedding material gravel shall be measured by the ton and paid for at the unit price bid for "bedding material" complete in place and accepted by the ENGINEER.

801-4.61 SUBCUT GRAVEL. Subcut gravel shall be measured by the ton and paid for at the unit price for "subcut gravel" complete in place and accepted by the ENGINEER.

801-4.62 ROCK EXCAVATION. All rock found in the trench area greater than 1 cubic foot shall be classified as Rock Excavation, measured by the cubic yard (CY), and disposed of by the CONTRACTOR or as directed by the ENGINEER.

The CONTRACTOR shall place all rocks greater than 1 cubic foot and less than 1 cubic yard in a pile to be measured by the ENGINEER. The total volume of the stockpile shall be reduced by 25% to account for void in the rock stockpile.

All rocks greater than 1 cubic yard shall be individually measured by the ENGINEER.

Payment shall be made at the unit price bid per cubic yard (CY) for "Rock Excavation."

801-4.63 CONCRETE MANHOLES. Concrete manholes shall be measured and paid for under subsection 1205-4.1.

801-4.64 TELEVISE SEWER MAIN. Televise Sewer main shall be measured by the linear foot (LF) from centerline of the manhole to centerline of the manhole or an end point and shall be paid for at the unit price bid for “Televise Sewer main” complete and accepted by the ENGINEER.

801-4.65 thru 801-4.68 (SIZE) INCH CLEANOUT. Cleanouts shall meet the requirements of this section and the standard detail and shall be measured and paid for per each (Ea.) "(Size) Inch Cleanout" complete in place and accepted by the ENGINEER.

SECTION 802 - STORM SEWERS

802-1 DESCRIPTION

This item shall consist of pipe and related items of the types, classes, sizes, and dimensions required on the plans, furnished and installed at the places designated on the plans and profiles, or by the ENGINEER, in accordance with these specifications and with the lines and grades given.

The bid price per linear foot of pipe in place shall include the cost of excavation and backfill, the cost of furnishing and installing all trench bracing, all fittings required to complete the pipe drain, as shown on the plans, and the material for and the making of all joints, including all connections to existing drainage pipe and manholes.

"Unstable," "Suitable," "Unsuitable," and "Unsatisfactory" soil or aggregate items shall be defined as stated in Section 202-1.

802-2 MATERIALS

802-2.1 GENERAL. The pipe shall be of the type called for on the plans or in the proposal and shall be in accordance with the following appropriate requirements.

802-2.2 REINFORCED CONCRETE STORM SEWER PIPE. Reinforced Concrete Storm Sewer Pipe shall conform to the requirements of ASTM C76.

Unless otherwise specified, all pipe shall be Class III for 24-inch and smaller and Class II for 27-inch and larger in accordance with ASTM C76, Wall B.

All pipe sections shall be cast in sections 8 feet, 6 feet, or 4 feet long, except that the variable length sections may be cast in order to match at manholes and inlets.

802-2.3 POLYVINYL CHLORIDE STORM SEWER PIPE. Polyvinyl chloride storm sewer (PVC) pipe-15 inches or smaller shall conform to the requirements of ASTM D3034 for type PSM, PVC sewer pipe and shall have an SDR of 35, all of which shall be stamped on the pipe. Polyvinyl chloride sewer pipe 18 inches or larger shall conform to the requirements of ASTM F679-PS46. PVC sewer shall have the elastomeric gasket type joint providing a watertight seal.

802-2.4 CORRUGATED STEEL STORM SEWER PIPE. Corrugated Polyethylene Storm Sewer pipe shall be of the quality to that manufactured by ADS/Hancor or an approved equal. The pipe shall have a smooth interior and annular exterior corrugations. The 4-inch to 60-inch pipe with integral bell and spigot joints shall conform to ASTM F2306. The joint shall be soil tight and gaskets shall conform to ASTM F477. Fittings shall conform to ASTM F2306. Bell and spigot connections shall utilize a spun-on or welded bell. Valley or saddle gaskets shall meet the soil-tight performance requirements of ASTM F477.

802-2.6 RIBBED POLYVINYL CHLORIDE STORM SEWER PIPE. Ribbed Polyvinyl Chloride Storm Sewer Pipe shall be of a quality equal to that manufactured by Extrusion Technologies, Inc. Ultra-Rib or an approved equal. The pipe shall meet the requirements of ASTM F794 and shall have a smooth interior. The pipe shall have a bell end and a spigot end which shall be connected using elastomeric gaskets. The pipe stiffness shall be a minimum of 46 p.s.i. when tested at 5% deflection in accordance with ASTM D2412.

802-2.7 CORRUGATED POLYVINYL CHLORIDE STORM SEWER PIPE. Corrugated Polyvinyl Chloride Storm Sewer Pipe shall be of a quality equal to that manufactured by Extrusion Technologies, Inc. Ultra-Corr or an approved equal. The pipe shall meet the requirements of ASTM F949 and shall have a smooth interior. The pipe shall have a bell end and a spigot end which shall be connected using elastomeric gaskets. The pipe stiffness shall be a minimum of 50 p.s.i. when tested at 5% deflection in accordance with ASTM D2412.

802-2.8 PERFORATED PIPE. Perforated Concrete Pipe in sizes 4 inches and above shall conform to the requirements of ASTM C444, Type 1 or 2. Corrugated HDPE Perforated Pipe in sizes 3 inches to 6 inches shall conform to ASTM F405. Corrugated HDPE Perforated Pipe in sizes 8 inches to 24 inches shall conform to ASTM F667. If PVC Perforated Pipe is selected, it must meet the requirement of Section 801-2.6 or an approved equal.

802-2.9 (TYPE OF PIPE) ARCH PIPE. Arch pipe shall conform to the same requirements as listed for standard pipe of like material.

802-2.10 (TYPE OF PIPE) FLARED END SECTION. Flared End Sections shall conform to the same requirements as listed for standard pipe and arch pipe of like material.

802-2.11 CONCRETE MANHOLES AND INLETS. Concrete manholes and inlets shall conform, in all respects, to Section 1205.

802-2.12 MORTAR. Mortar for pipe joints and connections to other drainage structures shall be composed of 1 part, by volume, of portland cement and 2 parts of mortar sand. The portland cement shall conform to the requirements of Subsection 501-2.2. The sand shall conform to the requirements of Subsection 501-2.5. Hydrated lime may be added to the mixture of sand and cement in an amount equal to 15% of the weight of cement used. The hydrated lime shall meet the requirements of ASTM C6.

802-2.13 CONCRETE. Concrete for pipe cradles shall conform to the requirements of Section 501.

802-2.14 CONCRETE PIPE JOINTS. Concrete Pipe Joints for non-pressure pipe shall be sealed with a butyl joint mastic. Butyl joint mastic shall be equal to EZ-STIK as manufactured by the Press-Seal Gasket Corporation or an approved equal. The CONTRACTOR shall use 1/2-inch butyl for 12-inch to 18-inch RCP, 3/4-inch for 21-inch

to 36-inch RCP, 1-inch for 42-inch to 66-inch RCP, and 1½-inch for 72-inch to 120-inch RCP. Rubber-type gaskets for concrete low-head pressure pipe shall conform to the requirements of ASTM C443 ASTM 361 if specified.

802-2.15 GASKET JOINT FOR PVC STORM SEWER PIPE. Gaskets for PVC sewer pipe joints shall be of the elastomeric type providing a watertight seal.

802-2.16 BEDDING MATERIAL. The bedding material shall be defined as stated in Section 801-2.9.

802-2.17 SUBCUT GRAVEL. The subcut gravel shall be as defined in Section 801-2.10.

802-2.18 MARKING TAPE. The CONTRACTOR will be required to furnish and install marking tape located 2 feet above the top of all storm sewer mains installed under this contract. The tape shall be of the non-detectable type and shall have a minimum width of 5 inches. The tape shall be green in color with the words "CAUTION SEWER LINE BELOW" imprinted on the tape in black capital letters. The marking tape shall be equal to that manufactured by Griffolyn Company, Inc. standard grade.

Cost of marking tape and installation shall be considered incidental to other items.

802-2.19 RIPRAP. Rock shall be hard, durable, angular in shape, and free from cracks, overburden, shale, and organic material. The width and the thickness of a single stone shall each be less than 1/3 the length of the stone. Rock shall not sustain a loss of more than 40 percent after 500 revolutions in an abrasion test conducted in accordance with ASTM C535-69. Rock shall not sustain a loss of more than 10 percent after 12 cycles of freezing and thawing (AASHTO test 103 for ledge rock procedure A). Rock shall have a minimum specific gravity of 2.50.

CONTRACTOR shall be responsible for all costs of testing rock for compliance with these specifications. In lieu of testing proposed rock for compliance with these specifications, rock obtained from county or North Dakota Department of Transportation approved quarries may be used. All rock materials considered for use as riprap shall have prior approval by the ENGINEER, before being placed.

Gradation for Type VL, L, M, H, and VH riprap are as follows:

Riprap Designation	% Smaller Than Given Size By Weight	Intermediate Rock Dimension (Inches)	$^{d}50$* (Inches)
Type VL	70-100	12	
	50-70	9	
	35-50	6	6**
	2-10	2	

Type L	70-100	15	
	50-70	12	
	35-50	9	9**
	2-10	3	
Type M	70-100	21	
	50-70	18	
	35-50	12	12
	2-10	4	
Type H	100	30	
	50-70	24	
	35-50	18	18
	2-10	6	
Type VH	100	42	
	50-70	33	
	35-50	24	24
	2-10	9	

*$^{d}50$ = Mean particle size
**Bury types VL and L with native top soil and revegetate to protect from vandalism.

Filter fabric shall be used under the riprap as bedding. The fabric shall have the same properties as, and be equal to, the nonwoven geotextile fabric Amoco 4551. Filter fabric shall be installed in accordance with manufacturer's recommendations. All costs for providing and installing the filter fabric shall be incidental to the riprap.

Hand placement of riprap may be required to insure an acceptable gradation, uniform surface, and to fill gaps between larger rocks to cover any exposed filter fabric.

Because of this relatively small size and weight, Type VL riprap and Type L riprap shall be buried with topsoil and revegetated to protect the rock from vandalism. All items shall be considered incidental to the bid price for riprap.

Riprap shall be measured by the ton and paid for at the unit price bid for "Riprap - Type ( )" complete and in place and accepted by the ENGINEER.

802-2.20 RIPRAP GROUT. Riprap grout shall be installed on a 4-inch thick layer of granular material. The granular material shall be in accordance with 801-2.9 Bedding Material. The riprap prior to the grout placement must be as clean as practical. The grout shall be delivered to the place of final deposit by means that will insure uniformity and prevent segregation of the grout. Placing of grout shall be obtained by pumping under pressure through a 2-inch maximum diameter hose to insure complete penetration of the grout into the rock layer. A vibrator is to be employed near the nozzle during placement to aid the flow of the grout. The excess grout must be removed immediately by washing to leave a clean rock face exposed. Grout shall fill the voids to

within approximately 4 inches of the riprap surface. The recommended minimum grout specifications include entrained air, a 28-day strength of at least 2,400 pounds per square inch, and a high slump (5-7 inches) in order to penetrate either the full depth of the riprap layer or at least 2 feet where the riprap layer is thicker than 2 feet. Concrete having maximum aggregate size of 3/4 inches may be substituted for grout when using Type M riprap or larger.

802-3 CONSTRUCTION REQUIREMENTS

802-3.1 EQUIPMENT. All equipment necessary and required for the proper construction of storm sewers shall be on the project in first-class working condition and approved by the ENGINEER before construction is permitted to start.

The CONTRACTOR shall provide appropriate hoisting equipment to handle the pipe while unloading and placing it in its final position without damage to the pipe.

The CONTRACTOR shall provide method and means to obtain the required compaction of the pipe bed and the backfill as specified.

The CONTRACTOR shall provide a sufficient number of watertight sewer plugs to prevent infiltration of water and any other foreign material from entering the existing sewer system and the newly constructed sewer lines.

802-3.2 EXCAVATION AND PREPARATION OF TRENCH. The trench shall be dug to the alignment and depth required and only so far in advance of pipe laying as the ENGINEER may permit. The trench shall be so braced and drained so that workmen may work there safely and efficiently. It is essential that the discharge from pumps be led to natural drainage channels, drains, or storm sewer.

The trench width may vary depending upon the depth of the trench and the nature of the excavated material, but in any case shall be of ample width to permit the pipe to be laid and joined properly and the backfill to be placed and compacted to the required density. The maximum width of trench for calculating bedding material quantities shall not be more than 48 inches, and for pipe 15 inches or larger no more than 36 inches greater than the outside diameter of the pipe barrel. HDPE sewer pipe shall have bedding material installed to 6 inches over the top of the pipe. Bedding material from the center of the pipe to 6 inches over the pipe shall be considered incidental to the pipe items.

The trench shall be excavated below the required grade so that the pipe may be laid on 4 inches of bedding material. If perforated storm drain is installed, the fine aggregate shall conform to Section 501-2.5.

Where the bottom of the trench uncovered at subgrade is unsuitable, and in the opinion of the ENGINEER cannot support the pipe, further depth and/or width shall be excavated and refilled to the pipe foundation grade with subcut gravel thoroughly compacted. In this instance, subcut gravel shall be considered a pay item.,

If other approved means shall be adopted to assure a firm foundation for the pipe, the CONTRACTOR will be allowed extra compensation. Extra compensation shall not be allowed for extra excavation and gravel used for seepage and ground water control.

If ordered in writing by the ENGINEER, the CONTRACTOR will be paid for any sheathing that the ENGINEER orders left in the trench in order to protect existing utilities or other items. The price to be paid for such sheathing material will be the current invoice price of said materials or such lesser price as the CONTRACTOR and the ENGINEER may agree that the material is worth at the time it is left in the trench.

All broken pavement or sidewalks shall be removed from the site of the work and deposited at a place selected by the ENGINEER. It shall be the responsibility of the CONTRACTOR to remove and replace at its own expense all sidewalk, curb, and gutter necessary for the installation of the pipe and manholes as shown on the plans and as directed by the ENGINEER, unless items are noted on plans. The removal shall be complete to the nearest joint in order that the replacement might be made in a workmanlike manner. No additional compensation will be allowed for this work and shall be included in the price bid for pipe or manhole installation.

All excavated material shall be piled in a manner that will not endanger the work and that will avoid obstructing sidewalks and driveways. Gutters shall be kept clean or otherwise satisfactory provisions made for street drainage.

The use of trench digging machinery will be permitted except in places where operation of same will cause damage to trees, buildings, or existing structures above or below ground, in which case hand methods shall be employed.

The CONTRACTOR is assumed to be familiar with all federal, state, and local laws, codes, ordinances, and regulations which in any manner affect those engaged or employed in the work, the material, or equipment used in or upon the site, or in any way affect the conduct of the work. No pleas of misunderstanding or ignorance on the part of the CONTRACTOR will, in any way, serve to modify the provisions of the contract. The CONTRACTOR shall provide and maintain on a 24-hour basis all necessary safeguards such as watchmen, traffic control devices, and night lights at CONTRACTOR's own expense in accordance with Subsection 124.

Excavation for pipe laying operations shall be conducted in a manner to cause the least interruption to traffic. Where traffic must cross open trenches, the CONTRACTOR shall provide suitable bridges at street intersections and driveways. Hydrants under pressure, valve boxes, curb stop boxes, and other utility controls shall be left unobstructed and accessible during the construction period.

Adequate provisions shall be made for the flow of sewers, drains, and water courses encountered during construction, and the structures which may have been disturbed shall be satisfactorily restored upon completion of the work.

Prior to trenching along or making any connections to the existing storm drainage system, the CONTRACTOR shall prevent infiltration and foreign material from entering the existing storm drainage system. Pipe plugs, diversion ditches, sediment traps, cofferdams, or other temporary facilities shall be installed so as to not disrupt existing drainage flow and shall remain in place until the construction has been accepted by the ENGINEER.

Trees, fences, poles, and all other property shall be protected unless their removal is authorized by the ENGINEER, and any property damages shall be satisfactorily restored by the CONTRACTOR. The cost of removal shall be included in the price bid per linear foot of sewer pipe in place unless listed separately in the proposal. Tree removal and root cutting shall be in conformance with Section 201.

802-3.3 ROCK EXCAVATION. The rock excavation shall be as defined in Section 801-3.3.

802-3.4 PIPE LAYING. Proper implements, tools, and equipment satisfactory to the ENGINEER shall be provided and used by the CONTRACTOR for the safe and convenient prosecution of the work. All pipe and fittings shall be carefully lowered into the trench piece by piece by means of a derrick, ropes, or other suitable tools or equipment in such a manner as to prevent damage to the pipe. Under no circumstance shall pipe be dropped or dumped into the trench.

After the trench has been excavated to the proper grade, the first pipe at the outlet end of the sewer shall be bedded to the proper line and grade with the bell end upstream. All pipe shall be laid to line and grade. The pipe shall be held in place by backfilling along the bottom and sides of the pipe section with bedding material, or in the case of perforated pipe, concrete sand, thoroughly tamped up to the centerline of the pipe and protected from movement.

During the pipe laying operation, the CONTRACTOR shall have available measures at the end of each work day or to install during the work day, to prevent foreign material from entering the newly installed pipe.

The CONTRACTOR shall exercise due care, so as to prevent water and other foreign matter from entering the newly constructed sewer mains at new manhole and inlet locations.

All joints shall be installed in accordance with the pipe manufacturer's instructions.

Connections between HDPE and RCP may be made using an internal coupler spigot adaptor equivalent to the Mar-Mac Coupler manufactured by Advanced Drainage Systems per Detail No. 802-2. This work shall be incidental to the storm sewer pipe.

Where polyvinyl chloride sewer pipe is installed in a vitrified clay sewer line, V.C. to P.V.C. adaptors shall be used at each junction. Adapters shall be Strong Back RC Series repair couplers as manufactured by Fernco, Inc., or approved equal.

The cost of adapters shall be considered incidental to the unit price bid for cast iron sewer pipe or polyvinyl chloride sewer pipe.

The interior of the flexible pipes shall be cleaned as the work progresses. The manholes and sewer pipe shall be flushed with clean water after completion and prior to acceptance by the ENGINEER.

802-3.5 BACKFILLING OF PIPE TRENCH. After the pipe has been laid to line and grade, the trench shall be backfilled under and along the sides of the pipe up to the centerline of the pipe by thoroughly compacting bedding material into place so as to form a uniform bed for the pipe. The compaction may be obtained by any approved method or equipment which will produce a uniform density meeting the requirement to obtain not less than 85 percent maximum dry density at optimum moisture made in accordance with ASTM D1557. Care shall be exercised not to displace the pipe or injure the pipe during the compaction operations. If the material in the trench is sand or gravel and acceptable to the ENGINEER, it will not be necessary to furnish any other material than that found within the trench to backfill up to the centerline of the pipe. If sand or gravel is not found within the trench, the CONTRACTOR will be required to furnish bedding material. It will be required to keep the gravel backfill completed within 3 lengths of the last pipe being laid and shall all be completed at the end of each day's work. After bedding operations, the trench shall be backfilled to a point 2 feet above the top of the pipe by any approved method or equipment which will produce a uniform density meeting the requirements to obtain not less than 80 percent of the maximum dry density at optimum moisture as determined by ASTM Compaction Control Test Designation D1557. The use of drop pile hammers, loaded or unloaded clam shells or backhoe buckets, or other similar equipment will not be permitted to obtain the required density below a point 2 feet above the top of the pipe.

When backfilling perforated pipe, the CONTRACTOR shall backfill with fine aggregate conforming to Section 501-2.5 to a point 2 feet below the finished surface. The remaining 2 feet shall be backfilled with existing spoil. The excess spoil shall be disposed of by the CONTRACTOR, incidental to other bid items. Care shall be taken when backfilling around the ~~wrapped~~ pipe to prevent damage to the trench section surrounded by the geotextile fabric.

When backfilling flexible pipe, the CONTRACTOR shall place and compact bedding material to a point 6 inches above the top of the pipe. Care shall be used not to over-deflect the roundness of the pipe. For flexible pipe, the pipe bedding shall be considered incidental from the center of the pipe to 6 inches over the top of the outside of the pipe.

The remaining trench shall be backfilled in accordance with the specifications for the class of backfill as set forth in Subsection 801-3.6. The areas for each class of backfill specified shall be designated on the plans.

The CONTRACTOR shall engage an independent soils testing laboratory, approved by the ENGINEER, to determine the soil proctors and perform the required compaction testing to be determined by the ENGINEER.

The compaction control tests for this section are based on one individual compaction test per 300 feet of trench per 30 inches of backfill. The CONTRACTOR shall be responsible for all retesting of failing tests and a proctor determination to represent each soil condition to be encountered on the project. The time, locations, depths, and frequency of compaction testing shall be at the discretion of the ENGINEER during construction. Should it become necessary to require an additional number of initial compaction tests, over and above the number specified for bidding purposes, the CITY OF BISMARCK will assume the responsibility to perform said additional testing. The CONTRACTOR, however, will be required to assume the cost of all retesting of failing tests regardless of the total number required during construction.

Compaction testing to determine densities may be accomplished with a nuclear density testing apparatus and/or the sand cone method. Should disputes arise concerning test results, they will be resolved by using only the sand cone.

Written reports of all test results shall be supplied to the ENGINEER and the CONTRACTOR by the testing laboratory as soon as possible. To expedite construction progress, it is necessary that the CONTRACTOR and ENGINEER be furnished with the results of all tests as soon as testing is completed.

The availability of the independent testing laboratory when needed and speed of testing and reporting are to be considered the responsibility of the CONTRACTOR.

Compaction control tests as stated above shall be incidental to the price bid for 802-2 Storm Sewer Pipe.

All excess dirt and rock must be removed from the streets and disposed of at such places as the ENGINEER may direct.

The CONTRACTOR shall restore all shrubbery, fences, sod, or other surfaces disturbed to a condition equal to that before the work began, furnishing all labor and material incidental thereto. If the area cannot be restored to the original line and cross section without the aid of grade stakes, they will be furnished by the ENGINEER at the CONTRACTOR's expense.

Following the certification of completion by the ENGINEER, the CONTRACTOR shall maintain the surface of unpaved trenches, adjacent curbs and gutters, sidewalks, driveways, shrubbery, fences, sod, or other surfaces disturbed for a period of three months thereafter. All material and labor required for maintenance of the trenches and adjacent structures shall be supplied by the CONTRACTOR and the work done in a manner satisfactory to the ENGINEER. The cost of backfilling and cleanup shall be included in the price per linear foot of sewer pipe in place.

802-3.6 BACKFILL CLASSIFICATIONS. The backfill classifications shall be as defined in Section 801-3.6.

802-3.7 Protecting Underground and Surface Structures. Temporary support, adequate protection and maintenance of all underground and surface structures, drains, sewers, water mains, service connections for both sewer and water, and other obstructions encountered in the progress of the work shall be furnished by the CONTRACTOR all at their own expense as approved by the ENGINEER.

(a) Deviations Occasioned by Other Utility Structures. Wherever existing utility structures or branch connections leading to main sewer or water mains or other conduits, ducts, pipes, or structures form obstructions to the grade and alignment of the sewer to be laid, they shall be permanently supported, removed, relocated, or reconstructed by the CONTRACTOR through cooperation with the Owner of the utility, structure, or obstruction involved. In those instances where their relocation or reconstruction is impracticable, a deviation from the line and grade will be ordered by the ENGINEER, and the change shall be made in the manner directed by the ENGINEER.

Wherever possible, all existing utility structures or branch connections leading therefrom will be located in advance of the excavation of the trench and properly marked. The CONTRACTOR shall not cut any existing utility lines unless it is determined by the ENGINEER that it is necessary in order to install the new sewer pipes. All utility lines that are cut by the CONTRACTOR with the approval of the ENGINEER shall be repaired or replaced by the CONTRACTOR as Extra Work.
All utility lines that are damaged by the CONTRACTOR shall be repaired or replaced by the CONTRACTOR at the CONTRACTOR's expense.

Wherever the ENGINEER shall determine it is necessary to remove or relocate any existing utility in order to properly install the new sewer pipe, the change shall be made in a manner directed by the ENGINEER and for which extra compensation will be allowed the CONTRACTOR.

(b) Deviation Without Engineer's Consent. No deviation shall be made from the required line and grade established by the ENGINEER without the consent of the ENGINEER.

(c) Subsurface Explorations. Whenever necessary to determine the location of existing pipes, valves, or other underground structures, the CONTRACTOR, after examination of available records and upon written order from the ENGINEER, shall make all exploration and excavations for such purpose for which the ENGINEER may allow extra compensation.

802-3.8 CIRCULAR DEFLECTION TEST. All fittings and plastic or HDPE pipe of 18 inches in diameter or larger shall be tested by the CONTRACTOR to ensure that circular deflections do not exceed the maximum allowable deflection. The CONTRACTOR shall test in accordance with Section 801-3.8 "Circular Deflection Test."

802-4 MEASUREMENT AND PAYMENT

802-4.1 thru 4.24 (SIZE) INCH STORM SEWER PIPE. Storm Sewer Pipe shall be measured by the linear foot (LF) from centerline of manhole or inlet to centerline of manhole or inlet and paid for at the unit price for "(Size) Inch Storm Sewer Pipe" complete in place and accepted by the ENGINEER.

802-4.25 thru 4.35 (SIZE) INCH ARCH STORM SEWER PIPE. (Size) Inch Arch Storm Sewer Pipe shall be measured by the linear foot (LF) from centerline of manhole or inlet to centerline of manhole or inlet and paid for at the unit price bid for "(Size) Inch Arch Storm Sewer Pipe" complete in place and accepted by the ENGINEER.

802-4.36 thru 4.50 (SIZE) INCH CORRUGATED STEEL STORM SEWER PIPE. Corrugated Steel Storm Sewer Pipe shall be measured by the linear foot (LF) from centerline of manhole or inlet to centerline of manhole or inlet and paid for at the unit price bid for "(Size) Inch Corrugated Steel Storm Sewer Pipe" complete in place and accepted by the ENGINEER.

802-4.51 thru 4.79 (SIZE) INCH (TYPE OF PIPE) FLARED END SECTION. Flared End Sections shall be measured on an individual unit basis (Ea.) and paid for at the unit price bid for "(Size) Inch Flared End Section" complete in place and accepted by the ENGINEER.

802-4.80 thru 4.89 (SIZE) INCH PERFORATED PIPE. (Size) Inch Perforated Pipe shall be measured by the linear foot (LF) in place and accepted by the ENGINEER. Bends, tees, caps, coupling bands, filter fabric, and backfill sand in accordance with Section 501-2.5 shall be considered incidental to the unit price bid.

802-4.90 BEDDING MATERIAL. Bedding Material shall be measured and paid for under Subsection 801-4.60.

802-4.91 SUBCUT GRAVEL. Subcut Gravel shall be measured and paid for under Subsection 801-4.61.

802-4.92 ROCK EXCAVATION. Rock Excavation shall be measured and paid for under Subsection 801-4.62.

802-4.93 CONCRETE MANHOLES AND INLETS. Concrete Manholes and Inlets shall be measured and paid for under Section 1205.

802-4.94 thru 802-4.98 RIPRAP - TYPE ( ). Riprap shall be measured by the ton and paid for at the unit price bid for "Riprap – Type ( )" complete in place and accepted by the ENGINEER.

802-4.99 RIPRAP GROUT. Riprap grout shall be paid for by the cubic yard (CY) of riprap grout installed and accepted by the ENGINEER. Granular bedding material and installation shall be considered incidental to the price bid for “grouted riprap.”

SECTION 900

WATER DISTRIBUTION

SECTION 901 – WATER MAINS

901-1 DESCRIPTION

This item shall consist of water main pipe and related items of the types, classes, sizes, and dimensions required on the plans, furnished and installed at the places designated on the plans and profiles, or by the ENGINEER in accordance with these specifications and with the lines and grades given.

The bid price per linear foot of pipe in place shall include the cost of excavation and backfill, the cost of furnishing and installing all trench bracing, concrete bases, and concrete thrust blocking, and the material for and the making of all joints, including all connections to existing water mains.

“Unstable,” “Suitable,” “Unsuitable,” and “Unsatisfactory” soil or aggregate items shall be defined as stated in Section 202-1.

901-2 MATERIALS

901-2.1 GENERAL. All materials that may come into contact with water intended for use in a public water system shall meet the American National Standards Institute (ANSI)/National Sanitary Foundation International (NSF) Standard 61. A product will be considered as meeting this standard if so certified by NSF, the Underwriters Laboratories, or other organization accredited by ANSI to test and certify such products. The materials shall be of the type selected by the CONTRACTOR and in accordance with the following appropriate requirements unless otherwise specified.

901-2.2 POLYVINYL CHLORIDE PIPE. Polyvinyl Chloride Pipe or Molecularly Oriented PVC (PVCO) shall meet the requirements of AWWA C900 or C905 or C909 or the latest revision thereof and shall be furnished in Cast Iron Pipe equivalent outside diameters with elastomeric joints. The pressure class of PVC pipe shall be PC150 with a DR 18 for pipe smaller than 16 inches and PC235 with a DR of 18 for pipe 16 inches or larger and for 12 inches or smaller PVCO pipe the pressure class shall be PC150 (AWWA C900 DR18 equivalent). 8-inch PVC or smaller pipe in accordance with ASTM, D2241, Class 200, DR21 may be bid as an equal if specified.

901-2.3 DUCTILE IRON PIPE. Ductile Iron Pipe shall be manufactured in accordance with the requirements of AWWA/ANSI C151/A21.51. Push-on joints and mechanical joints shall be manufactured in accordance with AWWA/ANSI C111/A21.11. Pipe thickness shall be designated in accordance with AWWA/ANSI C150/A21.50. All pipe under 16 inches shall use pressure class 350. All 16-inch to 20-inch pipe shall use pressure class 250 or higher. All 24-inch pipe shall be pressure class 200 or higher. All

30-inch pipe or larger shall be pressure class 150 or higher. All pipe shall be supplied with a cement mortar lining in accordance with AWWA/ANSI C104/A21.4. All pipe shall have a bituminous exterior coating in accordance with AWWA/ANSI C110/A21.10.

All pipe material suppliers shall be ISO 9001 or 9002 registered or provide the services of an independent inspection agency. Prior to the start of manufacturing, any manufacturer not meeting the ISO registration requirements shall submit to Owner or Owner's Engineer the name of an independent inspection agency for approval. The independent inspection agency shall be responsible for sample monitoring of chemical and mechanical tests, sample visual inspection of quality assurance tests performed on in-process pipe and fittings, and a sample visual and dimensional inspection report from the independent inspection agency of all witnessed tests shall be supplied to Owner or Owner's Engineer within ten (10) days of completion of pipe manufacturing.

Chemical samples shall be taken from each ladle of iron, and the manufacturers' chemical control limits shall be maintained for at least the following elements: carbon, sulfur, phosphorus, silicon, magnesium, chromium, manganese, tin, aluminum, cerium, copper, and lead. When chemical values fall outside the manufacturers' control limits, additional mechanical property tests shall be performed to assure minimum mechanical properties are met.

Where called out on the plans, restrained joint pipe and fittings shall be used. All restrained jointing systems require approval of the ENGINEER. Preapproved restraining systems include Griffin Pipe Product Co. Snap-Lok, US Pipe TR Flex, or American Cast Iron Pipe Co. Flex-Ring. The CONTRACTOR shall note that the standard mechanical joint is not a restrained joint and offers no practical resistance against joint separations.

901-2.4 CAST IRON AND DUCTILE IRON FITTINGS. Cast Iron fittings shall be manufactured in accordance with AWWA/ANSI C110/A21.10 and shall be furnished with either Standardized Mechanical Joints or Push-On Joints in accordance with AWWA/ANSI C111/A21.11. Cast Iron Fittings for sizes up to and including 12 inches shall have a working pressure of 250 pounds per square inch and fittings larger than 12 inches shall have a working pressure of 150 pounds per square inch conforming with AWWA/ANSI C110/A21.10. Ductile Iron fittings shall be manufactured in accordance with AWWA/ANSI C153/A21.53 or AWWA/ANSI C110/A21.10. Ductile Iron fittings shall have a working pressure of 350 pounds per square inch conforming with AWWA/ANSI C153/A21.53 or AWWA/ANSI C110/A21.10. All Cast Iron and Ductile Iron fittings shall be cement mortar lined and contain an exterior bituminous seal conforming with AWWA/ANSI C104/A21.4. All Cast Iron and Ductile Iron fittings shall be considered incidental to the price bid for water main.

901-2.5 GATE VALVE. The gate valve furnished shall be of a quality equal to that manufactured by American Flow Control under the minimum requirements in design, material, and workmanship conforming to the latest AWWA Standard C515. The metals used shall be in accordance with AWWA and ASTM Standards. Unless otherwise designated, all gate valves shall have a non-rising stem, O-ring stem seals,

2-inch operating nuts, and open counterclockwise. If a stem extension is specified, it shall be fastened to the operating nut with a set screw. The operating nut shall be drilled or otherwise indented to accept the set screw and provide a secure connection that will prevent an extension from coming loose during operation. The gate valve shall have a resilient synthetic rubber coating seat attached to the wedge, manufactured and designed in accordance with the latest AWWA Standard C515. Resilient-Seated Gate Valve body and bonnet shall be coated, inside and out, with a fusion bonded epoxy in accordance with AWWA C550. The waterway shall have a full unobstructed flow without recesses in the bottom. All bonnet bolts shall be stainless steel.

901-2.6 BUTTERFLY VALVE. When specified, a Butterfly Valve shall be furnished of a quality equal to that manufactured by the Mueller Company under the minimum requirements in design, material, and workmanship conforming to the latest standards of AWWA C504. The valve shall be constructed for a 150 psi differential pressure and capable of a drop tight pipeline test in either direction of flow. All bolts on the valve body and actuator shall be stainless steel. The actuator nut of the Butterfly Valves shall be placed on the east or north side of the main unless specified differently by the ENGINEER.

901-2.7 VALVE BOXES. The valve boxes furnished shall be of a quality equal to that manufactured by Tyler Pipe Model 6860 or Star Pipe Products Cast Iron Heavy Duty Model "G" with bases and dimensions of each section to be as follows:

No. 6 round base for 24-inch and smaller gate valves.
No. 160 oval base for 30-inch or larger.
No. 6 round base for all butterfly valves.
Covers marked "Water."
Top Section 25 1/2 inches long.
Extension pieces as required.

All valve boxes shall be capable of a minimum 6-inch top adjustment in either direction, up or down, to or from, the finished curb grades shown in the plans.

If any valve box extension pieces are required to make the above-mentioned adjustment, they shall be considered incidental to the price bid for either Butterfly Valve and Box and/or Gate Valve and Box.

901-2.8 HYDRANTS. Hydrants shall be manufactured in accordance with the requirements of AWWA C502. The hydrants shall be equipped with break-a-way type traffic flanges and two (2) 2½-inch hose connections with National Standard Threads and one (1) 4 1/2-inch pumper connection with National Standard Threads. All 6-inch and 8-inch hydrants shall be 5¼-inch Waterous Pacer Model WB-67-250 as manufactured by American Flow Control or 5¼-inch American Darling Model B-62-B as manufactured by American Flow Control or an approved equal. All hydrants shall be furnished with an 8'-6" bury depth from the bottom of the inlet pipe to the top of the ground. All bolts and nuts connecting the barrel to the foot elbow shall be stainless steel. The hydrants shall be surrounded by 1/2 cubic yards of subcut gravel so placed

that it will readily take up all water from the drip valves. The hydrants shall be set on a concrete pad 6 inches thick and 18 inches square.

901-2.9 RESET HYDRANT. Hydrants to be reset shall be either furnished from the CITY OF BISMARCK stores or an existing hydrant salvaged during construction. Hydrants shall be set at the location shown on the plans. Care shall be taken by the CONTRACTOR not to damage existing water mains, connections, or valves while removing existing hydrants. Care shall also be taken not to damage the hydrant to be reset during transportation or storage by the CONTRACTOR.

The depth of earth cover over the connecting pipe shall be no less than 8 feet. The hydrants shall be surrounded by 1/2 cubic yards of subcut gravel so placed that it will readily take up all water from the drip valves. The hydrants shall be set on a concrete pad 6 inches thick and 18 inches square.

901-2.10 TAPPING SLEEVE WITH TAPPING VALVE. For pipe sizes of 6 inches to 24 inches, the tapping sleeve shall be stainless steel with a stainless steel flange and bolts and shall conform to the “Smith Blair” Type 663 or “Romac” Type SST or an approved equal. For pipe sizes of 24 inches or larger, the tapping sleeve shall be epoxy lined and coated with stainless steel bolts and shall conform to the “Smith Blair” Type 622 Split Sleeve with O-Ring Seal. The tapping valve shall conform to City of Bismarck Standard Specification 901-2.5 for Gate Valves.

Tapping saddles with valves shall be hydrostatically pressure tested on the main prior to requesting a tap. The test shall be 125 pounds per square inch for a duration of 30 minutes.

The City of Bismarck Public Works Department will tap the water main at a charge to the CONTRACTOR. The CONTRACTOR shall be responsible for all other work connected with installation of the tapping sleeve and valve including the necessary space around the water main required for the tapping machine and assisting the Public Works Department in positioning the tapping machine.

901-2.11 CONCRETE. Concrete for pipe cradles, anchors, and thrust blocking shall conform to the requirements of Section 501.

901-2.12 BEDDING MATERIAL. The bedding material shall be defined as stated in Section 801-2.9.

901-2.13 SUBCUT GRAVEL. The subcut gravel shall be as defined in Section 801-2.10.

901-2.14 SALVAGE MATERIAL. All existing pipe, gate valves, fittings, etc. removed during construction, when requested by the ENGINEER, shall be salvaged and delivered to the Water Department as directed. No extra compensation will be allowed for this work.

901-2.15 MARKING TAPE. The CONTRACTOR will be required to furnish and install marking tape located 2 feet above the top of all water mains installed under this contract. The tape shall be of the non-detectable type and shall have a minimum width of 5 inches. The tape shall be blue in color with the words "CAUTION WATER LINE BELOW" imprinted on the tape in black capital letters. The marking tape shall be equal to that manufactured by Griffolyn Company, Inc. standard grade.

Cost of marking tape and installation shall be considered incidental to other items.

901-2.16 POLYETHYLENE ENCASEMENTS. All ductile iron and cast iron pipe, valves, valves boxes, fittings, and hydrants shall be encased with 8-mil linear low-density (LLD) polyethylene film in accordance with ANSI/AWWA C105/A21.5. All encasements shall be considered incidental.

901-2.17 MECHANICAL JOINT BOLT REQUIREMENTS. Bolts for mechanical joint fittings, valves, and hydrants shall be alternated with one-half stainless steel and one-half low alloy steel. Low alloy steel bolts shall contain a maximum content of carbon at 0.2 percent, manganese at 1.25 percent, sulphur at 0.5 percent, minimum content of nickel at 0.25 percent, and a combined content of nickel, copper, and chromium at 1.25 percent. Stainless steel bolts shall be Grade 304.

901-2.18 INSULATION BOARDS. The insulation shall have a thermal conductivity of not more than 0.28 BTU per hour per square foot per degree Fahrenheit per inch of thickness as tested in accordance with ASTM C177. The insulation shall not absorb moisture to an extent greater than 2.5 percent by volume as tested in accordance with ASTM D2127. The compression strength of the insulation shall be greater than 20 psi as tested in accordance with ASTM D-1621. The density of the insulation shall be between 0.9 and 1.3 pounds per cubic feet as tested in accordance with ASTM D-1622. The insulation shall be specifically designed for protection of underground utilities

901-2.19 POLYETHYLENE PLASTIC PIPE. If specified by the ENGINEER, Polyethylene Plastic Pipe shall be AWWA C906 high-density polyethylene ~~pipe~~ and shall meet the requirements of ASTM F714 Polyethylene (PE) Plastic Pipe (SDR-PR), based on the outside diameter, ASTM D1248 and ASTM 3350. All pipes shall be made of virgin material. No rework except that obtained from the manufacturer of the same formulation shall be used. The pipe shall be homogeneous throughout and be free of faults such as visible cracks, holes, foreign material, and blisters. The minimum wall thickness of the high-density polyethylene pipe shall meet the minimum requirements, SDR 11 pipe with Ductile Iron Pipe outside diameters.

901-3 CONSTRUCTION REQUIREMENTS

901-3.1 EQUIPMENT. All equipment necessary and required for the proper construction of water mains shall be on the project, in first-class working condition and approved by the ENGINEER before construction is permitted to start.

The CONTRACTOR shall provide appropriate hoisting equipment to handle the pipe while unloading and placing it in its final position without damage to the pipe.

The CONTRACTOR shall provide methods and means to obtain the required compaction of the pipe bed and the backfill, as specified.

901-3.2 EXCAVATION AND PREPARATION OF TRENCH. The trench shall be dug to the alignment and depth required and only so far in advance of pipe laying as the ENGINEER will permit. It is essential that the discharge from pumps be led to natural drainage channels, drains, or storm sewer.

The trench width may vary depending upon the depth of the trench and the nature of the excavated material, but in any case shall be of ample width to permit the pipe to be laid and joined properly and the backfill to be placed and compacted to the required density. The maximum width of trench for calculating bedding material quantities shall not be more than 48 inches and for pipe 15 inches or larger not more than 36 inches greater than the outside diameter of the pipe barrel.

The trench shall be excavated below the required grade so that the pipe may be laid on 4 inches of bedding material.

Where the bottom of the trench uncovered at subgrade is unsuitable and in the opinion of the ENGINEER cannot support the pipe, further depth and/or width shall be excavated and refilled to the pipe foundation grade with subcut gravel thoroughly compacted. In this instance, subcut gravel shall be considered a pay item.

If other approved means are adopted to assume a firm foundation for the pipe, the CONTRACTOR will be allowed extra compensation. Extra compensation shall not be allowed for extra excavation and gravel used for seepage and ground water control.

Whenever necessary, to prevent caving, excavations in sand, gravel, sandy soil, or other unstable material shall be adequately sheathed and braced. Where sheathing and bracing are used, the trench width shall be increased accordingly. Trench sheathing will be required on all ditches where necessary to prevent damage to utilities above or below ground. Trench sheathing shall remain in place until the pipe has been laid and the joint properly constructed and the backfill material thoroughly compacted to a depth over the pipe sufficient to protect any utility structures or adjacent paving, curb and gutter, sidewalks, or trees which might be damaged by caving of the trench walls. If ordered in writing by the ENGINEER, the CONTRACTOR will be paid for any sheathing that the ENGINEER orders left in the trench in order to protect the existing utilities. The price to be paid for such sheathing material will be the current invoice price of said materials or such lesser price as the CONTRACTOR and the ENGINEER may agree that the material is worth at the time it is left in the trench.

All broken pavement or sidewalks shall be removed from the site of the work and deposited at a place selected by the ENGINEER.

It shall be the responsibility of the CONTRACTOR to remove and replace at its own expense, unless otherwise specified, all sidewalk, driveway, curb, and gutter necessary for the installation of the pipe and manholes as shown on the plans and as directed by the ENGINEER. The removal shall be complete to the nearest joint in order that the replacement might be made in a workmanlike manner. No additional compensation will be allowed for this work and shall be included in the price bid for pipe installation.

Bell holes of ample dimension shall be dug in earth trenches at each joint to permit the joints to be made properly.

All excavated material shall be piled in a manner that will not endanger the work and that will avoid obstructing sidewalks and driveways. Gutters shall be kept clean or otherwise satisfactory provisions made for street drainage.

The use of trench digging machinery will be permitted except in places where operation of same will cause damage to trees, buildings, or existing structures above or below ground, in which case hand methods shall be employed.

The CONTRACTOR is assumed to be familiar with all federal, state and local laws, codes, ordinances, and regulations which, in any manner affect those engaged or employed in the work the material or equipment used in or upon the site, of in any way affect the conduct of the work. No pleas of misunderstanding or ignorance on the part of the CONTRACTOR will, in any way, serve to modify the provisions of the contract. The CONTRACTOR shall provide and maintain on a 24-hour basis all necessary safeguards such as watchmen, and traffic control devices at CONTRACTOR's own expense in accordance with subsection 124.

Excavation for pipe laying operations shall be conducted in a manner to cause the least interruption to traffic. Where traffic must cross open trenches, the CONTRACTOR shall provide suitable bridges at street intersections and driveways. Hydrants under pressure, valve boxes, curb stop boxes, and other utility controls shall be left unobstructed and accessible during the construction period. The CONTRACTOR shall notify the Fire Department of any loss of service of a fire hydrant or ability to use a fire hydrant one (1) day before the occurrence. The CONTRACTOR shall also notify the Fire Department when each hydrant is back in service. Any existing hydrants and valve boxes to be removed and not replaced shall be cut off two (2) feet below the surface, and the void shall be filled with granular material, up to two (2) feet below the surface. All hydrant heads shall be salvaged and delivered to the Public Works Department at 601 South 26th Street.

Existing gate valves shall only be operated by City of Bismarck representatives. The CONTRACTOR will operate its newly installed valves until the project is accepted. Existing valves may not close tight enough to get a watertight closure. The CONTRACTOR may have to do work without a total water shut off with no extra charge to the City of Bismarck. In the event extra valves have to be shut down to slow the flow of water, there shall be no extra charge to the City of Bismarck by the CONTRACTOR for the time up to two hours to accomplish the water shutdown.

Adequate provisions shall be made for the flow of sewers, drains, and water courses encountered during construction, and the structures which may have been disturbed shall be satisfactorily restored upon completion of the work.

Trees, fences, poles, and all other property shall be protected unless their removal is authorized by the ENGINEER, and any property damages shall be satisfactorily restored by the CONTRACTOR. The cost of removal shall be included in the price bid per linear foot of water main in place unless listed separately in the proposal. Tree removal and root cutting shall be in conformance with Section 201.

901-3.3 ROCK EXCAVATION. The rock excavation shall be as defined in Section 801-3.3.

901-3.4 PIPE LAYING. All water main and sanitary sewer crossings shall conform to the following policy:

1. Where both water and sewer are of new construction:

    a. No additional protections needed if water main crosses at least 5 feet above the sewer.

    b. If the water main crosses within 3 to 5 feet above the sewer, a full length of water main shall be centered over the sewer.

    c. If the water main crosses within 3 feet above the sewer, a full length of water main shall be centered over the sewer and the sewer joints located within 10 feet of the crossing shall be able to withstand 25 psi internal pressure.

2. Where water main crosses over an existing sewer:

    a. No additional protection needed if water main is at least 3 feet above the sewer. The intervening dirt must be left undisturbed.

    b. If crossing is within 3 feet above sewer, a full length of water main must be centered over the sewer main.

3. Where water main crosses under the sewer:

    a. In all cases, additional protection shall be provided by centering a full length of water main under the sewer main. All sewer joints located within 10 feet of the crossing shall be able to withstand 25 psi internal pressure.

Before lowering and while suspended, cast iron pipe shall be inspected for defects. Any defective, damaged, or unsound pipe shall be rejected. All foreign matter or dirt shall be removed from the inside of the pipe before it is lowered into its position in the trench, and it shall be kept clean by approved means during and after laying. Care shall be

taken to prevent dirt from entering the joint space. At times when pipe laying is not in progress, the open ends of the pipe shall be closed by approved means and no trench water shall be permitted to enter the pipe.

Cutting pipe for inserting valves, fittings, or closure pieces shall be done in a neat and workmanlike manner without damage to the pipe. Unless otherwise directed, pipe shall be laid with the bell ends facing the direction of laying. For lines on an appreciable slope, bells shall face upgrade, if directed by the ENGINEER. Whenever necessary to deflect the pipe from straight line, whether in the vertical or horizontal plane to avoid obstructions, to plumb stems, or other reasons, the degree of deflection shall be approved by the ENGINEER. When any railroad is crossed all precautionary construction measures required by the railroad officials shall be followed. No pipe shall be laid in water or when the trench condition or the weather is unsuitable for such work except by permission of the ENGINEER.

The CONTRACTOR shall place a 16”x16” or a larger concrete block, as directed by the ENGINEER, under all valves. A larger block will be required for larger valves. The block shall be considered incidental to the price bid for the valve.

The CONTRACTOR shall furnish and install temporary watertight plugs in any opening left in the main line or lead off the main line, during construction, that would allow water or other debris to enter the newly constructed pipe or any existing pipe.

901-3.5 TESTS. Inspection and tests must be made by the manufacturer on all pipe and component parts before shipment. Such tests shall be made by a testing laboratory satisfactory to the ENGINEER, and such tests shall be made in accordance with the requirements of the American Society for Testing Materials. Documentary evidence that the materials have been passed such inspection and tests must be furnished to the ENGINEER before the delivery of the materials on the job. Any materials which do not prove satisfactory after being placed, must be removed from the premises and replaced with satisfactory material. The cost of foundry inspection shall be paid for by the CONTRACTOR. After the pipe has been laid, all new pipe or any valve section thereof shall be subject to hydrostatic pressure test under the supervision of the ENGINEER. The test section shall be filled with water and the pressure shall be gradually increased. If defects are found, the CONTRACTOR shall immediately make the necessary repairs at its own expense. The final pressure test shall be 150 pounds per square inch and shall be held at least one hour. The CONTRACTOR shall furnish all tools, equipment, and material necessary to make the pressure test. The CITY OF BISMARCK will provide the water for filling the pipe.

901-3.6 DISINFECTION AND BACTERIOLOGICAL TESTING. After the new mains, replacement mains, and valved extensions have been tested, they shall be flushed until all foreign material has been removed. Chlorination applications shall be made under supervision of the ENGINEER in accordance with AWWA C651. Water shall be fed into the new line with chlorine applied in amounts to maintain a chlorine residual of 50 milligrams per liter for 24 hours or chlorine residual of 200 milligrams per liter for three (3) hours. All valves and hydrants in the section treated shall be operated during this

time in order to disinfect the appurtenance. Heavily chlorinated water should not remain in prolonged contact (maximum of 48 hours) with the water main pipe. The chlorine shall be flushed from the main through hydrants and taps until all excess chlorine has been removed. The CONTRACTOR shall be responsible for repairing all grass, new or existing, damaged by the chlorination and flushing process. No chlorination water will be permitted in the water main trench. The CONTRACTOR shall furnish all tools, equipment, materials, and chlorine to complete the chlorination process, incidental to other bid items. Prior to discharging chlorinated water into any drainage way, the CONTRACTOR shall obtain the permission of the ENGINEER. Taps are to be provided so at least one set of samples may be collected from every 1,200 feet of the new water main, with one set from the end of the line and at least one set from each branch exceeding 50 feet in length.

After final flushing each 1,200-foot segment and branches greater than 50 L.F., and before the new water main is connected to the distribution system, two consecutive sets of acceptable samples, per 1,200-foot main or 50-foot branch, taken at least 24 hours apart, shall be collected from the new main. The CONTRACTOR or testing laboratory, in the presence of the ENGINEER, shall perform the sampling. The CONTRACTOR shall record the locations the samples were taken. Sampling shall be performed with due care to prevent contamination using sterile bottles provided by the testing laboratory. It is not recommended that samples be collected from hoses or fire hydrants. The testing of the samples shall be performed by a State of North Dakota certified testing laboratory selected by the CONTRACTOR. All samples shall be tested for bacteriological quality and shall show the absence of coliform organisms.

If trench water has entered the new main during construction or, if in the opinion of the ENGINEER, excessive quantities of dirt or debris have entered the new main, bacteriological samples shall be taken at intervals of approximately 200 feet and shall be identified by location. Samples shall be taken of water that has stood in the new main for at least 16 hours after final flushing has been completed.

The testing laboratory shall test for coliforms and e-coli using the "Colilert" or other ENGINEER approved equivalent test. The "Colilert" test is a pass/fail test that does not quantify the amount of bacteria. Any presence of coliforms or e-coli shall qualify as a failed test.

If the initial disinfection fails to produce satisfactory bacteriological results, the new main may be reflushed and shall be resampled. If check samples also fail to produce acceptable results, the main shall be rechlorinated by the continuous-feed or slug method of chlorination until satisfactory results are obtained.

Bacteriological samples shall be taken after repairs or short connection pieces are completed to provide a record for determining the procedure's effectiveness. If the direction of flow is unknown, the samples shall be taken on each side of the repair or connection. If positive bacteriological samples are recorded, then the situation shall be evaluated to determine corrective action, and daily sampling shall be continued until two (2) consecutive negative samples are recorded.

All disinfection and bacteriological testing shall be incidental to other items.

901-3.7 HANDLING PIPE AND ACCESSORIES. Pipe, fittings, valves, hydrants, and other accessories shall, unless otherwise directed, be unloaded at the point of delivery, hauled to and distributed at the site of the project by the CONTRACTOR. They shall at all times be handled with care to avoid damage. In loading and unloading, they shall be lifted by hoists or slid or rolled on skidways in such a manner as to avoid shock. Under no circumstances shall they be dropped. Pipe handled on skidways must not be skidded or rolled against pipe already on the ground. In distributing the material at the site of the work, each piece shall be unloaded opposite or near the place where it is to be laid in the trench. Pipe shall be handled in such a manner that a minimum of damage to the coating will result. Damaged coating shall be repaired in a manner satisfactory to the ENGINEER. Pipe shall be placed on the site of work parallel with the trench alignment and with bell ends facing the direction in which the work will proceed unless otherwise directed. The interior of all pipe fittings and other accessories shall be kept free from dirt and foreign matter at all times. Valves and hydrants before installation, shall be drained and stored in a manner that will protect them from damage by freezing.

901-3.8 BACKFILLING OF PIPE TRENCH. After the pipe has been laid to line and grade, the trench shall be backfilled under and along the sides of the pipe up to 2 inches over the top of the pipe by thoroughly compacting bedding material into place so as to form a uniform bed for the pipe. This compaction may be obtained by any approved method or equipment which will produce a uniform density meeting the requirements to obtain less than 85% maximum dry density at optimum moisture made in accordance with ASTM D1557. Care shall be exercised to not displace the pipe or injure the pipe during the compaction operations. If the material in the trench is sand or gravel and acceptable to the ENGINEER, it will not be necessary to furnish any other material than that found within the trench to provide the proper bedding. If sand or gravel is not found within the trench, the CONTRACTOR will be required to furnish bedding material.

The trench shall be backfilled to a point 2 feet above the top of the pipe (except when Class D Backfill is specified) by any approved method or equipment which will produce a uniform density meeting the requirements to obtain not less than 80% of the maximum dry density at optimum moisture as determined by ASTM Compaction Control Test Designation D1557. The use of drop pile hammers, loaded or unloaded clam shells or backhoe buckets, or other similar equipment will not be permitted to obtain the required density below a point 2 feet above the top of the pipe. The CONTRACTOR shall use specialized equipment or hand tamping around all appurtenances such as manholes, valve boxes, hydrants, and curb stops to insure proper density. The remaining trench shall be backfilled in accordance with the specification for the class of backfill as set forth in these specifications. The area for each class of backfill specified shall be designated on the plans.

The CONTRACTOR shall engage an independent soils testing laboratory, approved by the ENGINEER, to determine the soil moisture density relationships and perform the required compaction testing to be determined by the ENGINEER.

The compaction control tests for this section are based on one individual compaction test per 300 feet of trench per 30 inches of backfill and a minimum of one (1) test per service line, between 2 feet above pipe to 1 foot below finish grades or where directed. The CONTRACTOR shall be responsible for all retesting of failing tests and a proctor determination to represent each soil condition to be encountered on the project. The time, locations, depths, and frequency of compaction testing shall be at the discretion of the ENGINEER during construction. Should it become necessary to require an additional number of initial compaction tests, over and above the number specified for bidding purposes, the CITY OF BISMARCK will assume the responsibility to perform said additional testing. The CONTRACTOR, however, will be required to assume the cost of all retesting of failing tests regardless of the total number required during construction.

Compaction testing to determine densities may be accomplished with a nuclear density testing apparatus and/or the sand cone method. Should disputes arise concerning test results, they will be resolved by using the sand cone method of testing.

Written reports of all test results shall be supplied to the ENGINEER and the CONTRACTOR by the testing laboratory as soon as possible. To expedite construction progress, it is necessary that the CONTRACTOR and ENGINEER be furnished with the results of all tests as soon as testing is completed.

Compaction control tests as stated above shall be incidental to the price bid for water mains.

The availability of the independent testing laboratory when needed and speed of testing and reporting are to be considered the responsibility of the CONTRACTOR.

The CONTRACTOR shall restore all shrubbery, fences, sod, or other surfaces disturbed to a condition equal to that before the work began, furnishing all labor and material incidental thereto. These requirements will not be waived. If the area cannot be restored to the original line and cross section without the aid of grade stakes, they will be furnished by the ENGINEER at the CONTRACTOR'S expense.

Following the certification of completion by the ENGINEER, the CONTRACTOR shall maintain the surfaces of unpaved trenches, adjacent curbs and gutters, sidewalks, driveways, shrubbery, fences, sod, or other surfaces disturbed for a period of 3 months thereafter. All material and labor required for maintenance of the trenches and adjacent structures shall be supplied by the CONTRACTOR and the work done in a manner satisfactory to the ENGINEER. The cost of backfilling and cleanup shall be included in the price per linear foot of water main in place.

901-3.9 BACKFILL CLASSIFICATIONS. The backfill classifications shall be as defined in Section 801-3.6.

901-3.10 PROTECTING UNDERGROUND AND SURFACE STRUCTURES. Temporary support, adequate protection, and maintenance of all underground and surface structures, drains, sewers, water mains, service connections for both sewer and water, and other obstructions encountered in the progress of the work shall be furnished by the CONTRACTOR all at their own expense as approved by the ENGINEER.

(a) Deviations Occasioned by Other Utility Structures. Wherever existing utility structures or branch connections leading to main sewer or water mains or other conduits, ducts, pipes, or structures form obstructions to the grade and alignment of the water main to be laid, they shall be permanently supported, removed, relocated, or reconstructed by the CONTRACTOR through cooperation with the owner of the utility, structure, or obstruction involved. In those instances, a deviation from the line and grade will be ordered by the ENGINEER, and the change shall be made in the manner directed by the ENGINEER.

Wherever possible, all existing utility structures or branch connections leading therefrom will be located in advance of the excavation of the trench and properly marked. The CONTRACTOR shall not cut any existing utility lines unless it is determined by the ENGINEER that it is necessary in order to install the new water mains. All utility lines that are cut by the CONTRACTOR with the approval of the ENGINEER shall be repaired or replaced by the CONTRACTOR as Extra Work. All utility lines that are damaged by the CONTRACTOR shall be repaired or replaced by the CONTRACTOR at the CONTRACTOR's expense.

Wherever the ENGINEER shall determine it is necessary to remove or relocate any existing utility in order to properly install the new water main, the change shall be made in a manner directed by the ENGINEER and for which extra compensation will be allowed the CONTRACTOR.

(b) Deviation Without ENGINEER'S Consent. No deviation shall be made from the required line and grade established by the ENGINEER without the consent of the ENGINEER.

(c) Subsurface Explorations. Whenever necessary to determine the location of existing pipes, valves, or other underground structures, the CONTRACTOR, after an examination of available records and upon written order from the ENGINEER, shall make all exploration and excavations for such purpose for which the ENGINEER may allow extra compensation.

901-3.11 BLOCKING HYDRANTS AND FITTINGS. All hydrants, tees, and bends 22½ degrees and more shall be provided with suitable reaction blocking of concrete blocks of adequate size to prevent movement of fittings and hydrants when the pipe is under pressure. The blocks shall be placed in a manner acceptable to the ENGINEER and

shall allow pipe and fitting joints to be accessible for repair. The concrete blocks may be poured in place if sufficient time is allowed for curing.

901-3.12 MARKING VALVE BOX LOCATIONS. The CONTRACTOR will be required to furnish and install a steel fence post by each valve box unless directed not to by the ENGINEER. Steel fence posts to be used for valve locations shall be a "Tee" or "U" post having a minimum length of 5½ feet. The post shall be located 2 feet from the valve box in a direction toward the street.

The cost of the steel fence post and the installation shall be considered incidental to other bid items.

901-3.13 INSULATE WATER MAIN. The CONTRACTOR shall furnish and install the insulation required to insulate the water main as shown on the plans. The insulation shall be at least 4 inches thick by 8 feet wide centered on the water main. The material between the top of the water main bedding and the insulation shall consist of a concrete sand.

901-3.14 TEMPORARY WATER SUPPLY. If the CONTRACTOR elects to use a temporary water supply, the CONTRACTOR must provide a continuous water supply to the affected properties. The CONTRACTOR must use a polyethylene or PVC pipe. Rubberized garden hoses may not be used. The method and type of material shall be approved by the ENGINEER prior to setting up the temporary water supply. Any damage that may occur from the temporary water supply shall be the responsibility of the CONTRACTOR. All materials, labor, and equipment necessary to provide the temporary water supply shall be considered incidental to other bid items.

901-4 MEASUREMENT AND PAYMENT

901-4.10 thru 4.25 (SIZE) INCH WATER MAIN. Water main pipe shall conform to section 901-2.2 and 901-2.3. The water main pipe shall be measured by the linear foot (LF) through fittings and from centerline of pipe to centerline of pipe as shown in Standard Detail Number 900-2 and shall be paid for at the unit price bid for "(Size) Inch Water main" complete in place and accepted by the ENGINEER.

901-4.40 thru 4.49 "(SIZE) INCH BUTTERFLY VALVE AND BOX". Butterfly Valve and Box shall be measured on an individual unit basis (Ea.) and shall be paid for at the unit price bid for "(Size) Inch Butterfly Valve and Box" complete in place and accepted by the ENGINEER.

901-4.50 thru 4.69 "(SIZE) INCH GATE VALVE AND BOX". Gate Valves and Boxes shall be measured on an individual unit basis (Ea.) and shall be paid for at the unit price bid for "(Size) Inch Gate Valve and Box" complete in place and accepted by the ENGINEER.

901-4.70 6-Inch HYDRANT. 6-inch Hydrants shall be measured on an individual basis (Ea.) and paid for at the unit price bid for "6-inch Hydrant" complete in place and accepted by the ENGINEER.

901-4.71 8-Inch HYDRANT. 8-inch Hydrants shall be measured on an individual unit basis (Ea.) and paid for at the unit price bid for "8-inch Hydrant" complete in place and accepted by the ENGINEER.

901-4.72 CAST IRON AND DUCTILE IRON FITTINGS. Cast Iron and Ductile Iron Fittings shall be considered incidental to the price bid for (size) inch water main.

901-4.73 AIR RELEASE VALVE AND MANHOLES. Air Release Valve Manholes shall be measured and paid for under subsection 1205-4.4.

901-4.74 BEDDING MATERIAL. Bedding Material shall be measured and paid for under subsection 801-4.60.

901-4.75 SUBCUT GRAVEL. Subcut Gravel shall be measured and paid for under subsection 801-4.61.

901-4.76 ROCK EXCAVATION. Rock Excavation shall be measured and paid for under subsection 801-4.62.

901-4.77 RESET HYDRANT. Reset hydrants shall be measured on an individual basis (Ea.) and paid for at the unit price bid for "Reset Hydrant" complete in place and accepted by the ENGINEER.

901-4.78 INSULATE WATER MAIN. Insulate water main shall be measured by the linear foot of water main to be insulated (LF) and paid for at the unit price bid for "Insulate Water Main" complete in place and accepted by the ENGINEER.

901-4.80 thru 4.99 (SIZE) TAPPING SLEEVE WITH (SIZE) TAPPING VALVE AND BOX. Tapping sleeve and tapping valve and box shall be measured on an individual basis (Ea.) and paid for at the unit bid price for (Size) tapping sleeve with (Size) tapping valve and box complete in place and accepted by the ENGINEER.

SECTION 1000

ELECTRICAL

SECTION 1001 –ROADWAY STREET LIGHT CONSTRUCTION

1001-1 DESCRIPTION

This work shall consist of the construction of street lights and related items in accordance with these specifications and standard details at the locations and to the lines and grades shown on the plans or as directed by the ENGINEER.

1001-2 MATERIALS

1001-2.1 GENERAL. Materials to be furnished by the CONTRACTOR shall be all materials required to install roadway street lighting in place as shown on the plans complete and ready for operation.

All materials and equipment furnished shall be new and shall be approved by the Underwriter's Laboratories, Inc. as conforming to its standards in every case where such a standard has been established for the particular item in question.

It is the intent of the Plans and Specifications to comply in every respect to the requirements set forth by the National Electric Code, the North Dakota State Electrical Board, the local utility company, and the ordinances established by the CITY, and it shall be the responsibility of the CONTRACTOR to ensure that the above requirements are met in every respect.

Should any requirement of the above not be complied with by the Plans or the Specifications either through omission of equipment, material, and method of installation, or by specification of material, equipment, or installation methods, the CONTRACTOR shall immediately notify the ENGINEER.

Where items of equipment and/or materials are specifically identified herein by a manufacturer's name, model, or catalog number, only such specific items may be used in the base bid. If the CONTRACTOR desires to use items of material and equipment other than that named in the base bid, CONTRACTOR or Supplier shall apply in writing to the ENGINEER for approval of substitution at least seven (7) days prior to opening of bid. Request shall be in duplicate. Submittals must indicate the specific item or items to be furnished in lieu of those specified together with complete technical data and comparative data on specified items and proposed items.

All approved substitute items will be clearly identified in an addendum which will be sent to all bidders well in advance of opening of bids. Only those items on the drawings and specifications and those items approved prior to bidding shall be furnished and installed on this project.

Where substitute items are used, the CONTRACTOR shall assume all responsibility for physical dimensions and pay for all changes resulting from substitutions. This responsibility shall also include all extra work necessitated by other trades as a result of the substitutions.

The CONTRACTOR shall submit five (5) copies of descriptive shop drawings or product data covering the following items:

1. Feed point enclosures, relays, switches, panels, and photo cells.
2. Cable.
3. Conduit.
4. Light standard poles, each type.
5. Luminaires, each type.
6. Junction boxes.
7. Splice connectors.

Drawings or product data shall be marked as to item designation and submitted within thirty (30) days after Contract awards. No equipment shall be ordered until drawings and product data have been approved by the ENGINEER.

Submit shop drawings to:

City of Bismarck
Engineering Department
221 North Fifth Street
P.O. Box 5503
Bismarck, ND 58506-5503

The CITY reserves the right to order additional light standards and/or luminaires along with the CONTRACTOR's shipment for the specific project for the following types of Light Units B, B1, BR, C, C1, D1 and D2, as detailed in these specifications. Materials are to be billed to the CITY at the CONTRACTOR's invoice cost plus 15 percent. The CITY will be responsible for unloading and storing ~~of~~ additional materials ordered by the CITY. The CONTRACTOR shall contact the CITY, by letter, prior to placing the CONTRACTOR's order for light standards and luminaires. The CITY shall state quantity of additional materials, per item desired, in a letter addressed to the CONTRACTOR.

The CONTRACTOR shall keep one set of plans with him at all times to red line locations of conduits not requested by the CITY, but installed by the CONTRACTOR for his convenience. In addition, the red lined drawings shall contain relocation of light standards, feed points, and changes in the cable location. This red lined plan set shall be turned over to the CITY prior to the close of the project.

The CONTRACTOR shall be responsible for locating and marking all underground circuits associated with this project throughout the course of the project. The

CONTRACTOR shall be relieved of this responsibility at such point in the project when the lights are fully operational and a set of red lined drawings have been submitted and approved by the ENGINEER. The cost for all locating and marking shall be incidental to the cost of the project.

1001-2.2 UNDERGROUND CABLE AND CONDUCTORS. Underground circuit conductors shall be stranded copper, type “RHH/RHW” or "USE," conductors insulated for direct burial and rated 600 volts. Conductor sheath shall be marked as to voltage, AWG, type (RHH/RHW-USE), and manufacturer. The conductor sheath shall be color coded to indicate red-power, blue-power, and white-neutral.

Underground ground conductor shall be No. 6 stranded bare copper or Type TW insulated copper ground conductor. Service conductors from electric utility service point shall be Type RHW-USE, sized as per utility company requirements and electrical loading.

1001-2.3 CONDUITS. Conduits shall be 2-inch steel rigid galvanized conduit when jacked in place with bushings at each end. When pulled into place or direct buried, conduits shall be 2-inch polyvinyl chloride (PVC) schedule 40, U.L. listed for electrical usage and sunlight resistant. Bell type fittings shall be placed at both ends.

1001-2.4 MARKER TAPE. Marker tape shall be 6-inch wide red plastic tape marked "Caution - Buried Electric Cable."

1001-2.5 JUNCTION BOXES. Junction boxes shall be made of a lightweight, high density polymer concrete composite, UL listed with knockouts for cable entrance. The box shall comply with ANSI/SCTE 77 with a design load of 22,500 lbs., a test load of 33,750 lbs. and meet ANSI Tier 22 test provisions. The cover shall meet an 8,000 lbs. design load and 12,000 lbs. test load. Boxes shall be resistant to sunlight exposure, weathering, chemicals, and unaffected by freeze-thaw cycles to -50°F. Minimum dimensions shall be 24” X 13” X 26” D with stackable boxes or extensions allowed to achieve required depth. Box covers shall have stainless steel hex bolts and be stamped with standard logo "Street Lighting."

Box manufacturer shall be Quazite, model PG, Oldcastle Precast, Inc., model Synertech Heavy-Duty, or approved equivalent.

1001-2.6 SPLICE CONNECTORS. Splice connectors at junction boxes for multiple connections shall be Homac, type RAB-X-URD-BUSS submersible insulated subsurface terminal for copper conductor or approved equivalent.

Splice connectors at pole hand hold shall be Penn-Union IPBNA2/0XS or approved equivalent.

1001-2.7 FEED POINT ENCLOSURE

(a) Pad mounted feed point enclosure shall be made of minimum 1/8” aluminum, with a brushed aluminum finish, rated for NEMA 3R and be ETL or UL listed in accordance with UL 50. Dimensions of the enclosure shall be 42”W X 12”D X 51” H shall have a domed roof with a NEMA 3R drip shield and two doors. The doors shall have an aluminum continuous piano-style hinge, a neoprene gasket, and a stainless steel 3-point latch capable of being padlocked. The enclosure shall be equipped with back panel rails such that equipment may be mounted in the cabinet with no penetrations to exterior of the cabinet. The back panel shall be galvanized steel. All hardware shall be non-corrosive.

The enclosure shall be manufactured by Povolny Specialties or approved equivalent.

(b) Pole mounted feed point enclosure shall be made of minimum 1/8” aluminum, with a brushed aluminum finish, rated for NEMA 3R and be ETL or UL listed in accordance with UL 50. Dimensions of the enclosure shall be 30”W X 8”D X 36” H, with an exterior mounting plate and a single door. The door shall have a minimum of three lift off hinges, a neoprene gasket, and a stainless steel 3-point latch capable of being padlocked. The enclosure shall be equipped with back panel rails such that equipment may be mounted in the cabinet with no penetrations to exterior of the cabinet. The back panel shall be galvanized steel. All hardware shall be non-corrosive.

The enclosure shall be manufactured by Povolny Specialties, Hoffman, or approved equivalent.

1001-2.8 RELAYS, PANELS, SWITCHES, PHOTO CELL

(a) Relays shall be RCOC type MR-UD No. 6342 with normally open contacts.

(b) Electric panel shall be single phase load center with enclosure rated NEMA 1 with minimum 12 spaces/24 circuits, rated 120/240 volt, 100 amp two pole main breaker, copper bus and a minimum 22,000 amp IR. The load center shall be Square D, model QO120M100, or approved equivalent.

(c) A single pole test switch shall be provided to tests the lights. The switch shall be mounted on a metal box with raised switch cover. Utilizing laminate engraved nameplate(s), the switch options shall be marked as “Test” and “Auto” with two (2) 1/2-inch x 1 1/2-inch nameplate. Marker as a means of labeling will not be acceptable.

(d) Photo cell for control of relays shall be Hubbell PBT-1 or equal.

1001-2.9 STREET LIGHT STANDARDS

(a) Type B, B1 Standards shall be pre-stressed spun concrete of natural polished finish the precast type as manufactured by Ameron MEO-8.5-C6 Brace - No. 112 sky gray natural polished finish or equal to provide a minimum mounting height of 28 feet. Poles

shall be complete with hand holds and metal covers secured in place with screws. Concrete light standards shall be equipped with a grounding lead to bond the pole to the grounding system.

(b) Type BR standards shall be pre-stressed spun concrete of the precast type. Poles shall be Ameron SEO-4 (direct-embedded octagonal) with a 2 7/8" o.d. cast aluminum top tenon to provide a minimum mounting height of 13 feet. Color shall be No. 112 – sky gray, natural polished finish. Poles shall be complete with handhold access and covers secured in place with screws. Concrete light standards shall be equipped with a grounding lead to bond the pole to the grounding system.

(c) Steel light standards (C, C1) shall be steel, galvanized type, as manufactured by Valmont Industries, Inc. DS90 or equal, of one- or two-piece construction. Galvanizing shall be in accordance with ASTM A123. The shaft shall have only one longitudinal weld and shall have a minimum yield strength of 50,000 psi.

The Davit type mast arm shall be constructed of same material and by same method as the shaft. Mast arm shall have a tenon adaptor for luminaire mounting.

The anchor shall be a one-piece steel casting secured to the lower end of the shaft by two continuous welds. One weld shall be inside the base at the bottom of the shaft and the other shall be on the outside of the shaft at the top of the anchor base. The welded connection shall develop the full strength of the adjacent shaft section. The anchor base shall be complete with bolts, washers, shims, and bolt covers with cap screws for attaching covers to base. Grounding lug to be provided inside of the hand hold.

(d) Type D1 and D2 Standards shall be pre-stressed spun concrete with a black exposed aggregate finish with a gloss acrylic coating (6P3A) as manufactured by Ameron MEO-6 to provide a minimum mounting height of 19.5 feet. Poles shall be complete with hand holds and covers, painted to match pole color, and secured in place with screws. Concrete light standards shall be equipped with a grounding lead used to bond the pole to the grounding system.

A hand hold shall be provided in shaft opposite the roadside of pole for all pole types unless otherwise noted in the plans. Hand holds to be a minimum of 4 inches by 6 inches with reinforced frame and removable metal cover. Cover to be secured in place with screws.

1001-2.10 LUMINAIRES, LAMPS, BALLAST, POST WIRING WITH FUSE.

(a) Luminaires for the types B/B1 or C/C1 shall be totally enclosed with integral high-pressure sodium. Luminaires shall consist of head with ballast, socket and optical assembly.

Heads shall have a die-cast aluminum housing. The housing shall have a drop down power door with no photocell receptacle and be designed for internal wiring and an internal 4 bolt 2-inch slip fitter adjustable plus or minus 5 degrees (±5°) from horizontal.

An anodized aluminum reflector with a drop glass prismatic refractor shall provide a uniform distribution, IES Type III, medium, semi cutoff distribution unless otherwise noted in the plans or specifications. Photometric data shall be provided.

Ballasts shall be a constant wattage autotransformer or peak lead autotransformer with multiple voltage taps and suitable for cold weather starting at an ambient temperature of -20°F. Data listing starting and normal operating currents shall be provided. Luminaire shall have an encapsulated starter.

Lamps shall supply the following:

150 watt – 13,800 Lumens, Mean
250 watt – 25,000 Lumens, Mean
400 watt – 45,000 Lumens, Mean

Type B luminaires shall be as follows: American Electric Lighting, Model 315-15S-CA-MT1-R3DG-4B-ULNREC, General Electric, Model MDRA-15S-0-A-1-R-MS3-2U or approved equivalent.

Type B1 and Type C luminaires shall be as follows: American Electric Lighting, Model 325-25S-CA-MT1-R3DG-ULNREC, General Electric, Model MDRA-25S-0-A-1-R-MS3-2U or approved equivalent.

Type C1 luminaires shall be as follows: American Electric Lighting, Model 325-40S-CA-MT1-R3DG-ULNREC, General Electric, Model MDRA-40S-0-A-1-R-MS3-2U or approved equivalent.

All Luminaires, by Type specified, shall be by one manufacturer similar and equal.

(b) Luminaires for the Type BR lights shall be Holophane RSL350-33-BK series post-top units, non-photocell type with multiple voltage/high power factor ballasts, 150 watt and IES Type III medium, semi cutoff distribution glass refractor. Luminaires shall be equipped with integral slip fitter for 3-inch O.D. tenon mount.

(c) Luminaires for the Type D1 lights shall be Holophane ST-15AHP-MA-B3B series post-top units complete with ornate trim including spike finial, bands, ribs and medallions, black in color. Luminaires shall be non-photocell type with high power factor ballasts, 150 watt and IES Type III medium, semi cutoff distribution glass refractor. Luminaires shall be equipped with integral slip fitter for 3-inch O.D. tenon mount.

(d) Luminaires for Type D2 shall be Whatley Lighting, model 1542TR-150HPS-MT-HR3-BLK with a type PT01 mounting arm. The luminaire shall be non-photocell type with high power factor ballast (multi-tap wired for 120V), 150W HPS, IES type III optics and sandblasted-tempered glass globe. The mounting arm shall have a slip fitter for 3-

inch O.D. tenon mount. The fixture and arm shall be cast aluminum and shall have a polyester powder coat finish. All hardware shall be stainless steel.

(e) Post wiring shall be No. 10 AWG stranded copper, Type THHN/THWN-600 volt cable, three conductors minimum (power, neutral and ground). Post wiring fuses shall be a type FNM 10 ampere fuse with a Buss type HEB in line fuse holder.

1001-2.11 WOOD POLE. Wood pole shall be 30 feet Class 3 full length pressure treated (PENTA) pole.

1001-2.12 UNDERGROUND SPLICES. Underground splices shall not be permitted unless approved by the CITY. No more than two underground splices shall be permitted on any continuous run of cable between feed points, poles, and junction boxes.

When the ENGINEER has determined that a splice is acceptable, the CONTRACTOR shall install a Homac, type FSS splice. The splice shall then be wrapped once with 3M tape, type 130C and twice with Scotch tape, type Super 33 Plus.

1001-3 CONSTRUCTION REQUIREMENTS

1001-3.1 FEEDER AND DISTRIBUTION CIRCUITS. All feeders and distribution circuits shall be of the multiple type, 120/240 volt, single phase, and shall consist of two or three conductors constituting one or two 120 volt circuits or a single 240 volt circuit. Plans shall indicate where three-wire circuits (2-120) volt and two-wire circuits (1-120 volt or 1-240 volt) are to be installed.

The system shall be laid out on the plans, and distribution circuits shall be routed as shown.

Individual lamp circuits are to be fused in the base of each lighting standard. Tape fuse kits with a 1/2-inch lapped layer for a distance of 1½ inches on each side of joint with conductor. Fuse holders to be complete with proper fuse to protect luminaire ballast. The neutral conductor shall be solidly connected, unfused, throughout system.

Ground conductors shall be provided between all metal poles and associated feed points. Bond to metal pole, to ground rod in pole base, feed point enclosure, feed point panels, relay cabinets, and ground rod.

Conductors shall be continuous from pole base to pole base or from feed point to pole base. Splicing conductors underground will not be allowed without specific approval of ENGINEER.

1001-3.2 CABLE INSTALLATION: IN TRENCH AND/OR CONDUIT. Distribution circuits consisting of conductor cables, quantity and size as designated on plans and installed direct burial in trench or in conduit, shall be installed to a depth of not less than 24 inches below finished grade. Under streets, driveways, and sidewalks, all

conductors shall be installed in conduit and the top of the conduit shall be not less than 24 inches below the top of concrete, asphalt, or hard surfacing.

Conductor cables shall be packed in sand to provide a cushion and to facilitate drainage in the following manners: Excavate trench to required minimum depth of 27 inches (exception of 48 inches from feed points to transformers, in easements, or as specified). Trench shall be filled with 3 inches of clean, washed sand bedding, leveled and lightly tamped. Conductor cables, quantity and size designated on plan shall be laid loosely in trench and spaced as per drawing detail. Conductor crossovers shall be avoided. CONTRACTOR may be required to utilize a paddle template ahead of the 3 inches of sand cover to insure proper spacing. Cover sand shall not be less than 3 inches in depth over conductors. Sand shall again be leveled and lightly tamped the full width of the excavated trench. Trench shall then be backfilled and tamped in regular manner.

If a specific excavation is judged to be free of rocks and debris, CONTRACTOR shall be allowed to utilize backfill without sand cushion upon approval of the ENGINEER.

Care shall be taken during installation of conductors to not bend or kink cable to a radius of less than six times the cable diameter.

On conductors installed on branch circuit feeders routed underground from pole to pole, all circuits shall be brought up into pole for splicing (especially lights on alternated circuits) unless indicated on plans. No splicing will be allowed of underground cable. Splicing will only be allowed in junction boxes, pole bases, or feed point cabinets.

Conduit shall be provided under hard surfaced driveways, streets, and alleys and when rising up into feed points. Conduit not installed direct burial underground shall be jacked or bored. Rigid steel galvanized conduits shall be installed when jacked or heavy wall Schedule 40, UL Listed PVC may be utilized when installed with a directional bore or "mole" device. All conduits shall extend a minimum of 12 inches beyond each roadway, alley, driveway, or concrete surface, but not more than 18 inches or as directed by the ENGINEER. Rigid steel conduit ends shall be carefully reamed to provide a smooth surface for conductors. Plastic bushings shall be placed on rigid steel conduit ends and PVC conduit ends shall be terminated with bell type fittings. All cable run through conduit shall be pulled by hand and shall not be strained in any manner. A slack loop shall be provided in conductors prior to entering any conduit. All conduit installed, whether direct buried, bored, or jacked, shall be a minimum of 24 inches below finished grade. Where practical, conduit shall be sloped to provide drainage. Two-inch PVC conduit shall be provided for the risers at the pad mounted feed points and 2-inch rigid steel galvanized at pole mounted feed points.

If an obstruction is encountered when "jacking" or boring conduit under a concrete or asphalt street, driveway, or alley, or for any reason it becomes impractical to install the conduit in this manner, the ENGINEER may grant the CONTRACTOR permission to cut or saw the street, drive, or sidewalk so conduit can be trenched into place. The width of the concrete or asphalt to be removed and the depth of the saw cutting shall be performed as directed by the ENGINEER. No extra payment will be made for cutting,

removing, and replacing the concrete or asphalt. Cost of installing conduit by this method shall be included in the price for 2-inch conduit jacked or pulled in place. Street "cuts" shall not be started until permission is granted by the ENGINEER in writing.

Any excavations or exploratory cuts to any asphalt or concrete surface for the purpose of locating any existing underground utilities or obstructions to aid in the boring or jacking of conduit shall be included in the price bid for 2-inch conduit jacked or pulled in place including any traffic control requirements. No extra payment will be made for sawing, removing, and replacing the concrete or asphalt. The width of the concrete or asphalt to be removed and the depth of the saw cutting shall be performed as directed by the ENGINEER.

In lieu of trenching to install either conductor or conduit, the CONTRACTOR may utilize directional boring. In this event, alignment and depth shall be maintained according to plan. Any deviation in alignment and/or depth shall be corrected by the CONTRACTOR as directed by the ENGINEER, at no cost to the CITY. CONTRACTOR shall be paid as if trenched by the appropriate unit bid price for 27-inch or 48-inch trenching plus the unit price bid for sod (conversion from square yards to linear feet shall be: 1 square yard equals 6 linear feet). Any conduit bored solely for the CONTRACTOR's convenience and/or not paid for at the unit price bid for jacked or bored conduit shall be the CONTRACTOR's expense, at the discretion of the ENGINEER for those locations with existing grassed vegetation. The CONTRACTOR shall also be paid for the relocation of any mailbox without a concrete base that would have been relocated if the cable or conduit would have been installed by trenching. For mailboxes with a concrete bases, the CONTRACTOR shall be paid for 2-inch conduit jacked or pulled in place beneath the concrete base.

Where excavations for cables or conduits are made, the backfill shall be compacted in 4-inch lifts or layers. Only suitable material as defined by Section 202-1c shall be used for backfill of trenches. Backfill with sub-standard material is prohibited even though such materials may have been excavated from the trench.

Excavated trenches shall be compacted by approved methods to 90 percent of maximum dry density at optimum moisture in accordance with ASTM D1557 when under future pavement or concrete areas. Boulevards, grassed areas, and any other disturbed areas shall be compacted to 80 percent of maximum dry density at optimum moisture.

Any tree roots encountered and/or damaged during trenching or boring shall be handled according to Section 201-2.4 "Tree Root Cutting."

Provide marker tape near top of trench (6 inches below final grade) in all trenches; cost to be a part of trenching price.

1001-3.3 JUNCTION BOX INSTALLATION. Junction boxes shall be provided at locations shown on plans installed in the boulevard. Top of junction boxes to be same

elevation as top of adjacent curb or sidewalk. Provide a 12-inch base of crushed rock or gravel as shown in standard detail.

Provide slack loop in all conductors ~~not being spliced~~ so conductor can be pulled up out of junction box to a minimum of 24 inches above ground.

Splice connectors shall be as indicated in section 1001-2.6. Splice Connectors and shall be raised off the bottom of the junction box such that they are directly below the junction box cover and position upward.

Tape connector kits with half lapped layer of rubber or synthetic rubber tape and one layer of tape for a distance of 1½ inches each side of joint.

1001-3.4 STREET LIGHT FEED POINTS. Street light feed points consist of pole mounted, pad mounted, and modifications and additions to existing.

(a) Pad Mounted (New). See detail drawing for typical details. New pad mounted feed points shall be set on a concrete pad which is set on a 12-inch thickness of a crushed rock subbase. Provide 1-inch chamfer all around and down vertical sides to a minimum of 2 inches below grade.

Concrete pad shall be 52 inches long by 24 inches wide by 12 inches deep (52"L x 24"W x 12"D) and shall be constructed in accordance with Section 500 for Concrete Construction. Provide seven (7) 2-inch PVC stub outs down through concrete base and a minimum of 12 inches beyond edge of base. Point one (1) conduit towards power company transformer and six (6) towards direction of outgoing circuits. Provide two 1-inch conduits for ground rods through the base only. Provide 2-inch minimum R.S. conduit for incoming service conductors towards direction of utility transformer. Notify ENGINEER a minimum of 24 hours prior to pouring concrete base such that the form and cable entrance may be inspected.

Provide unistrut mounting brackets and a galvanized steel back panel.

Provide 40 amp one pole breakers for each 120 volt street light circuit and a 15 amp one pole breaker for control circuit, 20 amp one pole breaker for convenience outlet. Paint handle of 15 amp breaker red.

Provide one (1) relay for each three (3) wire street light circuit (2-120V) or one (1) relay for each two (2) wire street light circuit (1-240V).

Install switch to be connected into control circuit to bypass photocell for daytime test of street lights.

Install G.F.I. outlet.

Provide two 5/8-inch x 10-foot copper ground rods in two conduits through concrete to below cabinet. The two ground rods shall be a minimum of 6 feet apart and shall be looped. Bond all circuits, relay cabinets, electric panel cabinet, enclosure, and neutral.

Photo cell shall be mounted on side of enclosure as shown on detail. Direct photo cell to north.

Provide 120/240 volt single-phase service from power company. Pad mount transformer. Service shall be installed in 2-inch, minimum, conduit with three (3) Type RHW-USE conductors. Route conduit entrance through meter. All unfused conductors within the feed point enclosure shall be placed in conduit.

Location of pad mounted feed points as shown on plans to be determined by location of power company pad mount transformer and by power company space requirements. CONTRACTOR shall verify location of power company pad mounted transformer.

(b) Pole Mounted (New). Incoming service to be fed from below grade unless otherwise shown on the plans. Provide 1½-inch steel galvanized conduit, minimum and three THW conductors. Route conduit entrance through meter. All unfused conductors within the feed point enclosure shall be placed in conduit.

Provide two 5/8-inch x 10-foot copper ground rod at bottom of pole as shown on detail and ground enclosure and service. The two ground rods shall be a minimum of six feet apart and shall be looped. Bond all circuits, relay cabinets, electric panel cabinet, enclosure, and neutral.

Provide one (1) relay for each three (3) wire street light circuit (2-120V) or one (1) relay for each two (2) wire street light circuit (1-240V).

Feed points mounted on poles belonging to others shall conform to all requirements of the pole's owner, such as use of standoff brackets. The CONTRACTOR shall be responsible for coordinating with the pole's owner in conforming to their requirements. CONTRACTOR shall verify location of power company pad mounted transformer.

(c) Pole or Pad Mounted: (Existing) Additions and Modifications. Provide additional relays and feeder conduits as shown or specified. Relays to match existing.

If cabinet is painted, paint entire exterior portion of each existing feed point associated with this project as follows:

1. Wire brush entire surface and sand with extra fine sandpaper.
2. Wipe down with thinner.
3. Brush or spray on two (2) coats of ZRC zinc dust primer.
4. Brush or spray two (2) coats of enamel paint, dark green, suitable for exterior use.

1001-3.5 STREET LIGHT STANDARD WITH CONCRETE FOUNDATIONS AND DIRECT BURIED

Street light standards shall be set as shown on the plans with the hand hole facing away from curb and cable entrances parallel to roadway. Install ½" X 10' ground rod at each street light. All street light standards shall be grounded. Bond ground conductor, street light standard and ground rod.

The conductor leads to the luminaire (power, neutral and ground) shall extend from the cable in the light standard base through a fuse holder with a fuse. The fuse holder shall be supported by the conductors at the level of the hand hole. Sufficient excess conductor length shall be provided to permit withdrawal of the fuse holder through the hand hole a minimum of 6 inches outside of the hand hole for purposes of installation and inspection. The neutral wire shall not be fused.

Luminaires shall be adjusted to supply light to roadway as directed by the ENGINEER.

The concrete to be used in the construction of the concrete housekeeping pads, base pads and foundations shall be a minimum of 3500 psi strength at 28 days with a minimum of six (6) bags of cement per cubic yard of concrete and shall conform in all respects to the CITY Specifications, Section 600 for Sidewalks, Driveways, Curb, and Combined Curb and Gutter.

(a) Direct Buried Light Standards. A concrete housekeeping pad of dimensions shown in the standard detail shall be constructed around the base of the direct buried concrete standard. A concrete-bearing base pad 6 inches thick, minimum, shall be provided under the bottom of the pole as shown. Provide roofing tar paper around poles between pole and concrete pad. In sidewalks, provide 3/4-inch expansion joint around concrete pad between concrete pad and sidewalk.

All costs of constructing the concrete pads and bases shall be included in the price bid for furnishing and installing concrete street light units.

(b) Light Standards with Concrete Foundations. Concrete foundations shall be installed as per standard detail. Foundations shall be completed with anchor bolts, rebar, and conduit stub-in. Anchor bolt spacing to accommodate poles shall be verified in the field prior to construction. The CONTRACTOR shall notify ENGINEER at least 24 hours prior to pouring concrete foundation such that the form with the anchor bolt placement, rebar, conduit stub-ins and ground rod can be inspected. The CONTRACTOR shall provide concrete tests in conformance with CITY Specifications, a minimum of one test per day or a minimum of one test per five (5) light standard foundations or as directed by the ENGINEER.

1001-3.6 REPAIRS TO SIDEWALKS AND STREETS. In locations where sidewalks, pavement, driveways, or streets are opened for installation of cable, conduit, or poles, the removed area shall be replaced to the original thickness. The repair shall conform

in every way to either Sections 300 and 400 for AC Pavement or Section 500 for Concrete Repair.

In the event of the inability of the CONTRACTOR to either jack or bore conduit or cable under an improved area, the CONTRACTOR shall with the ENGINEER's permission be allowed to open cut the area. The CONTRACTOR shall minimize the area removed as much as possible but must allow enough area to allow for installation of cable or conduit and access for compactive equipment. CONTRACTOR shall make cuts that uniform edges for trenches may be obtained. In concrete, the CONTRACTOR shall utilize existing joints or sawed joints as required.

The backfill under all improved areas shall be Class A and shall be compacted to not less than 90 percent of maximum dry density at optimum moisture in accordance with ASTM D1557.

Where specified on plans, CONTRACTOR shall be paid at the unit price bid for Concrete or AC Pavement unless incidental. In the event of the inability of the CONTRACTOR to jack or bore under an improved area and an open cut is required, the CONTRACTOR shall be paid at unit price bid for installed material only. Repair shall be at CONTRACTOR's expense.

In the event of damage of an improved area due to construction, all repair costs shall be borne solely by the CONTRACTOR.

All AC Pavement patches or repairs shall be seal coated in accordance with Section 400 "Flexible Surface Courses."

1001-3.7 SODDING. Sodding installation and care shall conform in every respect with Section 1203 of the CITY Specifications with the following exception: Existing sod may be cleanly cut, removed, rolled up, kept moist, replaced, and paid per square foot of sodding. CONTRACTOR shall then be responsible for care as per CITY Specifications. Topsoil to a minimum depth of 4 inches shall be salvaged and replaced or provided and added to the top of the trench incidental to sodding bid item.

1001-3.8 MAIL BOXES - REMOVE & RESET. In some areas mail boxes are already in place behind the curb and will require removal and replacement to make way for trenching operations.

CONTRACTOR shall be responsible for:

1. Removal and replacement of mailboxes and shall make every effort to remove and replace in same day. In the event this is not possible, CONTRACTOR shall construct a temporary wood base to hold mail boxes upright.

2. Coordination with Bismarck Post Office. The Post Office shall be informed when a mail box is removed and not replaced for more than 24 hours to coordinate mail delivery.

Mail boxes shall be reinstalled with front of box directly above box side (property side) of curb with bottom of box 38 inches above top of curb. Boxes shall be plumb, level, set square with street, and tamped solidly in place.

Mail boxes installed on concrete pads and metal pedestals shall not be removed. A conduit shall be installed under the base as directed by the ENGINEER.

1001-3.9 NAMEPLATES. The CONTRACTOR shall provide nameplates per standard detail for all feed point cabinets. The nameplate shall consist of letters and/or numbers~~, photo offset~~ printed on a thermosetting laminated plastic consisting of melamine or phenolic core and melamine surface.

The nameplates shall be mounted on the front of the feed point or control cabinet door with a combination of aluminum round head screws and Minnesota Mining and Manufacturing Company adhesive similar to type EC-847.

Name plates to have a black background with white letters and/or numbers unless noted otherwise. One (1) 1½-inch x 6-inch nameplate and one (1) 1½ inch x 3-inch nameplate shall be provided for each new feed point and two (2) ½-inch x 1½-inch nameplate for each test switch. The feed point number and location shall be as designated on plans.

1001-3.10 REMOVAL OF STREET LIGHT STANDARDS. The standards shall be removed from the sites shown on the plans, salvaged, transported, and stored (by blocking and supporting at three points) in the CITY storage yard located at the Municipal Solid Waste Facility on North 52nd Street. The luminaire receptacle wires shall be disconnected at the fuses and the luminaire shall be removed from the mast arm, salvaged, and delivered to CITY stores at 601 South 26th Street. Where the plans call for salvaging the conductors in place and resplicing these conductors, the standards shall be removed carefully to prevent damage to the conductors. Splices shall be made by using approved materials. The hole where the standard was removed shall be filled with earth supplied by the CONTRACTOR and tamped to the density of the surrounding soil.

1001-3.11 RELOCATE STREET LIGHT POLE. This item shall consist of removing a light standard from its present location and installing at a new location shown on the plans and connecting to the new or existing street light system wiring. The CONTRACTOR shall furnish any materials and equipment required for removing and replacing the street light pole. Installation shall be performed in accordance with these specifications.

1001-3.12 TESTS. When the installation is complete and at such time as may be specified by the ENGINEER, the CONTRACTOR shall conduct an operating test for approval. The equipment shall be demonstrated to operate in accordance with the requirement of the Specifications, the Plans, and to the satisfaction of the ENGINEER. The CONTRACTOR shall furnish all instruments and personnel required for all tests. All

test results shall be recorded. The CONTRACTOR shall be present during all tests and inspections unless so informed by the ENGINEER. Nighttime tests and inspections may be held at the option of the ENGINEER.

1001-4 MEASUREMENT AND PAYMENT

1001-4.1 TYPE B STREET LIGHT UNITS (150 Watt HPS). Type B Street Light units consist of:

1. Designated luminaire with ballast and lamp.
2. Concrete direct buried poles with bracket.
3. Wiring and connections to underground circuits.
4. Ground rod with connections.
5. Fuse holder and fuses.
6. Concrete pads.
7. Unit set in place and ready for operation.

Measurement for payment shall be on a per each (EA) unit basis for each complete unit installed and ready for operation.

1001-4.2 TYPE B1 STREET LIGHT UNITS (250Watt HPS). Type B1 Street Light units consist of:

1. Designated luminaire with ballast and lamp.
2. Concrete direct buried poles with bracket.
3. Wiring and connections to underground circuits.
4. Ground rod with connections.
5. Fuse holder and fuses.
6. Concrete pads.
7. Unit set in place and ready for operation.

Measurement for payment shall be on a per each (EA) unit basis for each complete unit installed and ready for operation.

1001-4.3 TYPE C STREET LIGHT UNITS (250Watt HPS). Type C Street Light units consist of:

1. Designated luminaire with ballast and lamp.
2. Galvanized steel, bolt down base type pole with bracket.
3. Wiring and connections to underground circuits.
4. Fuse holder and fuses.
5. Reinforced concrete base, anchor bolts, anchor bolt covers, ground rod, and conduit.
6. Unit set in place and ready for operation.

Measurement for payment shall be on a per each (EA) unit basis for each complete unit installed and ready for operation.

1001-4.4 TYPE C1 STREET LIGHT UNITS (400Watt HPS). Type C1 Street Light units consist of:

1. Designated luminaire with ballast and lamp.
2. Galvanized steel bolt over base type pole with bracket.
3. Wiring and connections to underground circuits.
4. Fuse holder and fuses.
5. Reinforced concrete base, anchor bolts, anchor bolt covers, reinforced ground rod, and conduit.
6. Unit set in place and ready for operation.

Measurement for payment shall be on a per each (EA) unit basis for each complete unit installed and ready for operation.

1001-4.5 TYPE BR STREET LIGHT UNITS (150WATT HPS). Type BR street light units consist of:

1. Designated luminaire with ballast and lamp.
2. Concrete direct buried poles ~~with bracket~~.
3. Wiring and connections to underground circuits.
4. Ground rod with connection.
5. Fuse holder and fuses.
6. Concrete base and housekeeping pad.
7. Unit set in place and ready for operation.

Measurement for payment shall be on a per each (EA) unit basis for each complete unit installed and ready for operation.

1001-4.6 TYPE D1 STREET LIGHT UNITS (150WATT HPS). Type D1 street light units consist of:

1. Designated luminaire with ballast and lamp.
2. Concrete direct buried poles.
3. Wiring and connections to underground circuits.
4. Ground rod with connection.
5. Fuse holders and fuses.
6. Concrete base and housekeeping pads.
7. Unit set in place and ready for operation.

Measurement for payment shall be on a per each (EA) unit basis for each complete unit installed and ready for operation.

1001-4.7 TYPE D2 STREET LIGHT UNITS (150WATT HPS). Type D2 street light units consist of:

1. Designated luminaire with ballast and lamp.

2. Concrete direct buried poles and mounting arm.
3. Wiring and connections to underground circuits.
4. Ground rod with connections.
5. Fuse holders and fuses.
6. Concrete base and housekeeping pads.
7. Unit set in place and ready for operation.

Measurement for payment shall be on a per each (EA) unit basis for each complete unit installed and ready for operation.

1001-4.10 TWO-INCH CONDUIT "JACKED" OR PULLED IN PLACE

(1) Two-inch conduit jacked in place shall be 2-inch steel rigid galvanized conduit, jacked in place at proper depth sloped for drainage complete with bushings each end and extending 12 inches beyond each side of roadway, drive, or walk or 2-inch PVC (Schedule 40) pulled in placed by use of direct bore or drill. PVC shall be sloped similar to 2-inch rigid.

(2) Excavations required for "setting up" for pushing or drilling conduit shall be a part of the conduit installation price. This includes breaking out and replacing concrete, asphalt, excavations, filling and tamping, and replacement of grass or sod.

Measurement for payment shall be for each linear foot (LF) of conduit installed and approved by the ENGINEER.

1001-4.11 2-INCH CONDUIT - PVC LAID IN TRENCH. Two-inch conduit, PVC laid in trench shall include conduit laid in a trench free of voids and rocks, sloped for drainage and properly backfilled as per specifications. Trenching cost is part of 1001-4.12 - "Trenching 27" Deep."

Measurement for payment shall be for each linear foot (LF) of conduit installed and approved by the ENGINEER.

1001-4.12 TRENCHING – 27-INCH DEPTH. Trenching shall include all excavation required for conductor trenches, sand cushion, backfill, tamping, and marker tape.

Measurement for payment shall be for each linear foot (LF) of trench excavated, backfilled, tamped, and with surface restored to original conditions all as accepted and approved by the ENGINEER.

1001-4.13 TRENCHING – 48-INCH DEPTH. Trenching shall include all excavation required for conductor trenches, sand cushion, backfill, tamping, and marker tape.

Measurement for payment shall be for each linear foot (LF) of trench excavated, backfilled, tamped, and with surface restored to original conditions all as accepted and approved by the ENGINEER.

1001-4.20 JUNCTION BOXES. Junction boxes shall include all splice connectors, excavated, backfilled, tamped, and with surface restored to original conditions.

Measurement for payment will be for each (EA) junction box installed complete and accepted by the ENGINEER.

1001-4.21 and 1001-4.22 COPPER CIRCUIT CONDUCTORS. Three (3) No. 4 or two (2) No. 4 stranded copper as the case may be type RHW-USE single conductor - 600-volt direct burial cables laid in common trench and/or conduit shall be measured by the linear foot (LF) of three (3) No. 4 or two (2) No. 4 single conductors furnished and installed in trenches/conduits. Measurement will be from centerline to centerline of pole or feed point. CONTRACTOR shall make allowance for necessary conductors in and out of poles and feed point in unit price.

Payment shall be at unit price bid for each linear foot (LF) of three (3) or two (2) wire conductor installed and accepted by the ENGINEER. Two (2) wire conductor shall be paid for under bid item 1001-4.21, and three (3) wire shall be paid for under 1001-4.22.

1001-4.23 & 4.24 COPPER CIRCUIT CONDUCTORS. Two No. 2 or three No. 2 stranded copper, as case may be, Type RHW-USE single conductor – 600 volt direct burial cables laid in common trench and/or conduit shall be measured by the linear foot of two No. 2 or three No. 2 single conductors furnished and installed in trenches/conduits. Measurement will be from centerline to centerline or pole or feed point. CONTRACTOR shall make allowance for necessary conductors in and out of poles and feed point in unit price.

Payment shall be at unit price for each linear foot of 3- or 2-wire conductor installed and accepted by the ENGINEER. Two-wire conductor shall be paid for under Bid Item 1001-4.23 and 3-wire shall be paid for under 1001-4.24.

1001-4.25 NO. 6 COPPER GROUND - TYPE T OR BARE. No. 6 copper Type TW or bare shall include all grounding conductor, ground rods, and connections. Ground rods (1/2 inch x 10 feet) to be provided at all junction boxes where No. 6 groundwire is required as part of system.

Measurement for payment shall be based on each linear foot (LF) of No. 6 conductor installed, measured from junction box or pole foundation along centerline of trench or duct.

1001-4.26 MAIL BOXES - REMOVE & RESET. Multiple boxes on a single or double support structure shall be measured and paid for per support removed and replaced.

Payment shall be for each (EA) group removed, reset, and approved by the ENGINEER.

1001-4.27 SODDING. Sod shall be measured and paid for under Subsection 1203-4.1.

1001-4.28 STREET LIGHT BASE. This item consists of constructing concrete bases per those specifications and standard details for street light standards.

Street light bases shall be measured per each (EA) and paid for at the unit price bid for street light bases complete in place and accepted by the ENGINEER.

1001-4.29 REMOVE STREET LIGHT STANDARDS. This item shall consist of removal, transport, and storage of street light standards.

Measurement for payment shall be per each (EA) street light standard removed and stored accepted by the ENGINEER.

1001-4.30 RELOCATE STREET LIGHT POLE. This item shall consist of removing and relocating and reconnecting conductors not to be abandoned measured per each (EA) pole in place and accepted by the ENGINEER.

SECTION 1200

MISCELLANEOUS CONSTRUCTION

SECTION 1201 – TOPSOIL

1201-1 DESCRIPTION

This item shall consist of preparing the ground surface for topsoil application, removing topsoil from designated stockpiles or areas to be stripped on the site or from approved sources off the site, and placing and spreading the topsoil on prepared areas in accordance with this specification at the locations shown on the plans as directed by the ENGINEER.

1201-2 MATERIALS

1201-2.1 TOPSOIL. Topsoil shall be the surface layer of soil with no admixture of refuse or any material toxic to plant growth, and it shall be reasonably free from subsoil and stumps, roots, brush, stones (2 inches or more in diameter), clay lumps, or similar objects. Brush and other vegetation which will not be incorporated with the soil during handling operations shall be cut and removed. Ordinary sods and herbaceous growth such as grass and weeds are not to be removed but shall be thoroughly broken up and intermixed with the soil during handling operations. The topsoil or soil mixture, unless otherwise specified or approved, shall have a pH range of approximately 5.5 pH to 7.6 pH, when tested in accordance with the methods of testing of the Association of Official Agricultural Chemists in effect on the date of invitation of bids. The organic content shall be not less than 3 percent nor more than 20 percent as determined by the wet-combustion method (Chromic acid reduction). There shall be not less than 20 percent nor more than 80 percent of the material passing the 200 mesh sieve as determined by the wash test in accordance with ASTM D1140.

Natural topsoil may be amended by the CONTRACTOR with approved materials and methods to meet the above specifications.

1201-2.2 INSPECTION AND TESTS. Within ten (10) days following acceptance of the bid, the ENGINEER shall be notified of the source of topsoil to be furnished by the CONTRACTOR. The topsoil shall be inspected to determine if the selected soil meets the requirements specified and to determine the depth to which stripping will be permitted. At this time, the CONTRACTOR may be required to take representative soil samples from several locations within the area under consideration and to the proposed stripping depths, for testing purposes as specified in 1201-2.1.

1201-3 CONSTRUCTION REQUIREMENTS

1201-3.1 GENERAL. Areas to be topsoiled shall be shown on the plans. If topsoil is available on the site, the location of the stockpiles or areas to be stripped of topsoil and the stripping depths shall be shown on the plans.

Suitable equipment necessary for proper preparation and treatment of the ground surface, stripping of topsoil, and for the handling and placing of all required materials shall be on hand, in good condition, and approved by the ENGINEER before the various operations are started.

1201-3.2 PREPARING THE GROUND SURFACE. Immediately prior to dumping and spreading the topsoil on any area, the surface shall be loosened by disks or spike-tooth harrows, or by other means approved by the ENGINEER, to a minimum depth of 2 inches to facilitate bonding of the topsoil to the covered subgrade soil. The surface of the area to be topsoiled shall be cleared of all stones larger than 2 inches in any diameter, and all litter or other material which may be detrimental to proper bonding, the rise of areas, as shown on the plans, which are too compact to respond to these operations shall receive special scarification.

Grades on the area to be topsoiled, which have been established by others as shown on the plans, shall be maintained in a true and even condition. Where grades have not been established, the areas shall be smooth-graded and the surface left at the prescribed grades in an even and properly compacted condition to prevent, insofar as practical, the formation of low places or where water will stand.

1201-3.3 OBTAINING TOPSOIL. Prior to the stripping of topsoil from designated areas, any vegetation, briers, stumps and large roots, rubbish, or stones found on such areas, which may interfere with subsequent operations, shall be removed using methods approved by the ENGINEER. Heavy sod or other cover, which cannot be incorporated into the topsoil by disking or other means, shall be removed.

When suitable topsoil is available on the site, the CONTRACTOR shall remove this material from the designated areas and to the depth as directed by the ENGINEER. The topsoil shall be spread on areas already tilled and smooth graded, or stockpiled in areas approved by the ENGINEER. Any topsoil stockpiled by the CONTRACTOR shall be rehandled and placed without additional compensation. Any topsoil that has been stockpiled on the site by others and is required for topsoiling purposes, shall be removed and placed by the CONTRACTOR. The sites of all stockpiles and areas adjacent thereto, which have been disturbed by the CONTRACTOR, shall be graded if required and put into a condition acceptable for seeding.

When suitable topsoil is secured off the project site, the CONTRACTOR shall locate and obtain the supply, subject to the approval of the ENGINEER. The CONTRACTOR shall notify the ENGINEER sufficiently in advance of operations in order that necessary measurements and tests can be made. The CONTRACTOR shall remove the topsoil from approved areas and to the depth as directed. The topsoil shall be hauled to the

site of the work and placed for spreading or spread as required. Any topsoil hauled to the site of the work and stockpiled shall be rehandled and placed without additional compensation.

1201-3.4 PLACING TOPSOIL. The topsoil shall be evenly spread on the prepared areas to a uniform depth of 4 inches after compaction unless otherwise shown on the plans or stated in the special provisions. Spreading shall not be done when the ground or topsoil is frozen, excessively wet, or otherwise in a condition detrimental to the work. Spreading shall be carried on so that turfing operations can proceed with a minimum of soil preparation or tilling.

After spreading, any large, stiff clods and hard lumps shall be broken with a pulverizer or by other effective means, and all stones or rocks (2 inches or more in diameter), roots, litter, or any foreign matter shall be raked up and disposed of by the CONTRACTOR. After spreading is completed, the topsoil shall be satisfactorily compacted by rolling with a cultipacker or by other means approved by the ENGINEER. The compacted topsoil surface shall conform to the required lines, grades, and cross sections. Any topsoil or other dirt falling upon pavements as a result of hauling or handling of topsoil shall be promptly removed.

1201-4 MEASUREMENT AND PAYMENT

1201-4.1 TOPSOILING. Topsoiling shall be measured by the cubic yard (CY) and paid for at the unit price bid for "Topsoiling" complete in place and accepted by the ENGINEER. When topsoil is weighed for final quantity, it shall be converted to cubic yards at the rate of 1.3 tons per cubic yard or at a rate approved by the ENGINEER.

SECTION 1202 – SEEDING

1202-1 DESCRIPTION

This item shall consist of seeding the areas shown on the plans or as directed by the ENGINEER in accordance with these specifications.

1202-2.1 SEED. All seed shall be of certified class quantity and shall be certified by the state in which the seed variety was grown. All seed containers must be sealed and labeled to comply with existing North Dakota Seed Laws and Regulations or in accordance with U.S. Department of Agriculture Rules and Regulations under the Federal Seed Act, if shipped in Interstate Commerce. Seed shall be furnished separately or in mixtures in standard containers with the seed name including variety and species, lot numbers net weight, percentages of maximum weed seed content clearly marked for each kind of seed. The CONTRACTOR shall furnish the ENGINEER duplicate signed copies of a statement by the vendor certifying that each lot of seed has been tested by a recognized laboratory for seed testing within nine (9) months of date of delivery. Seed not planted within the nine-month period shall be retested for dormant seed, hard seed, and germination, and a new certified test report furnished. This statement shall include: Name and address of laboratory, date of test, lot number for each kind of seed and the results of tests as to name, percentages of purity and of germination, and percentage of weed content for each kind of seed furnished and, in case of a mixture, the proportions of each kind of seed. The minimum acceptable purity, germination, weed seed, and other crop seed are those of certified class seed.

Seed which has become wet, moldy, or otherwise damaged in transit or in storage will not be acceptable.

Seed mixture shall contain not less than the specified percent of Pure Live Seed and shall be uniformly mixed by weight to one of the following formulas:

SEED CLASSIFICATION TABLE
(Rate of Application of Pure Live Seed)

Percent by Weight	Variety and Species of Grass Seed	Percent Pure Live Seed

NOTE: R = Rhizomatous Variety and B = Bunch Grass Variety

Class I

(For Pasture or Hayland, Fairly Level Surface)

(50 lbs./acre)

40	'MDN-759' Pubescent Wheat Grass (R)	85
40	'NORDAN' Crested Wheat Grass (B)	85
20	'PRIMAR' Slender (B) or 'OAHE' Intermediate Wheat Grass (R)	85

Class II
(Turfgrass For Sunny Areas)
(5 lbs./100 SY)

85	'PARK' Kentucky Blue Grass (R)	85
15	'ARCTARED' Creeping Red Fescue (R) or 'DURAR' Hard Fescue (R)	85

Class II
(Turfgrass For Shady Areas)
(5 lbs./100 SY)

60	'PARK' Kentucky Blue Grass (R)	85
40	'ARCTARED' Creeping Red Fescue (R) or 'DURAR' Hard Fescue (R)	85

Class III
(For Level Surface or Gentle Slopes)
(50 lbs./acre)

100	'LINCOLN' Smooth Brome Grass (R)	85

Class IV
(For Slopes 3:1 or More)
(50 lbs./acre)

50	'LINCOLN' Smooth Brome Grass (R)	85
50	'NORDAN' Crested Wheat Grass (B)	85

Class V
(For Critical, Saline Area)
(25 lbs./acre)

40	'PARKWAY' Fairway Crested Wheat Grass (B)	85
20	'PRIMAR' Slender Wheat Grass (B)	85
40	'ROSANA' Western Wheat Grass (R)	85

Class VI

As specified on the plans or in the Special Provisions

When Class V seed mixture is specified, it shall be sown at the rate of 25 pounds per acre; 40 to 60 pounds of phosphorus and 20 to 30 pounds of actual nitrogen per acre shall be mixed into the upper 3 inches of the soil or spread on the soil prior to seeding or by means of fertilizer attachment on the drill. Fertilizer shall not be mixed with the seed.

When Class I, III, IV, or V seed mixture is specified and seeding is performed between August 20 and September 20, or when dormant seeding in late fall, 30 pounds of oats or rye seed per acre shall be added to the mixture as a nurse crop. This nurse crop shall be mowed before it reaches 6 inches in height.

If seed with the specified percentage of pure live seed cannot be obtained, additional seed may be used to bring the amount of live seed up to the amount specified. Seed and seeding mixtures shall be free of all prohibited noxious weed seed and shall not contain more than .5 percent by weight of restricted noxious weed seeds. Prohibited and restricted noxious weeds shall be those as classified by the State Seed Department.

1202-2.2 TOPSOIL. Topsoil shall consist of loose, friable, loamy topsoil that is free of excess acid and alkali. It shall be free from objectionable amounts of sod, hard lumps, gravel, sub-soil, or other undesirable material which will prevent the formation of a suitable seed bed. Topsoil shall, prior to being stripped, have demonstrated by the occurrence upon it of healthy crops, grass, or other vegetable growth that is of good quality, and that it is reasonably well drained.

1202-2.3 LIME. Lime, if specified, shall be ground limestone containing not less than 85 percent of total carbonates, and shall be ground to such fineness that 90 percent will pass through a No. 20 mesh sieve and 50 percent will pass through a No. 100 mesh sieve. Coarser material will be acceptable, providing the rates of application are increased to provide not less than the minimum quantities and depth specified by an approved testing laboratory on the basis of the two (2) sieve requirements above. Dolomitic lime or high magnesium lime shall contain at least 10 percent of magnesium oxide.

1202-2.4 FERTILIZER. Fertilizer, if specified, shall be standard commercial fertilizers supplied separately or in mixtures containing the percentages of total nitrogen, available phosphoric acid, and water soluble potash. They shall be applied at the rate and to the depth specified and shall meet the specified requirements of the applicable State and Federal laws. They shall be furnished in standard containers with name, weight, and guaranteed analysis of contents clearly marked thereon. No cyanamide compounds of hydrated lime shall be permitted in mixed fertilizers.

The fertilizers may be supplied prior to seeding in one of the following forms:

(a) A dry, free-flowing fertilizer suitable for application by a common fertilizer spreader;

(b) A finely-ground fertilizer soluble in water, suitable for application by power sprayers; or

(c) A granular or pellet form suitable for application by blower equipment.

(i) Fertilizer shall not be applied after seeding.

(ii) The fertilizer shall not be mixed with the seed, but it may be applied at the same time as the seed if a suitable fertilizer attachment on the equipment is used.

(iii) The fertilizer may be mixed into the hydro-mulch mixture as it is applied.

1202-2.5 SOIL FOR REPAIRS. The soil for fill and topsoil of areas to be repaired shall be at least of equal quantity to that which exists in areas adjacent to the area to be repaired. The soil shall be relatively free from large stones, roots, stumps, or other materials that will interfere with subsequent sowing of seed, compacting, and establishing turf, and shall be approved by the ENGINEER before being placed.

1202-2.6 RESEEDING AND REPAIR. Damage caused from wind or water erosion, CONTRACTOR's operation, or traffic, which can be repaired with equipment normally used for seeding work, shall be repaired at the CONTRACTOR's expense. The CONTRACTOR shall make any repairs as directed by the ENGINEER prior to final acceptance.

1202-3 CONSTRUCTION REQUIREMENTS

1202-3.1 SEEDING DATES. Seeding shall be done at such times of the year when the climatic conditions of temperature and moisture are most adaptable for growth and work of this nature. It is preferred that seeding shall be accomplished before May 20 and after October 20 of each year. Plant after October 20 when there is no chance of fall germination as dormant seedings are made for spring germination. Also plant early enough in fall to allow at least forty (40) days for seedlings to develop before they go dormant in the fall, preferably before September 10. Planting between May 20 and September 10 will be allowed if adequate moisture can be provided.

1202-3.2 SEEDBED PREPARATION. The areas to be seeded shall be cleared of all debris, rank vegetation, and other material that is detrimental to the preparation of a seed bed. The areas thus cleared shall be shaped or bladed by approved equipment to the plan's cross section or to such cross section that best fits the existing conditions. The areas thus prepared shall be disked, harrowed, raked, or worked by some other approved method, into a reasonably smooth, even seed bed. The surface of the prepared seed bed shall be firm enough so that adult footprints are hardly visible and will limit seeding depth to a maximum of 3/4 of an inch. If rolling is necessary to secure this, it shall be done prior to the seeding and with and approved roller, the weight of which shall be dependant upon the particular soil conditions.

All slopes shall be worked on the contour, or as directed by the ENGINEER.

Fertilizer and/or lime, when specified, shall be spread and worked into the soil during the final preparation of the seed bed.

The CONTRACTOR shall take four (4) representative and suitably sized samples of the soils which are to form the seed bed and shall submit these samples to an approved testing laboratory for analysis and recommendation of fertilizer to be used. Sampling

and testing shall be done with sufficient promptness so as to avoid delaying the work. Test results shall be submitted to the ENGINEER.

1202-3.3 SEED APPLICATION. Seed shall be sown by means of a force feed drill with a grass seed attachment which provides a uniform flow and depth of seed placement (1/4 to 1/2 inches), except that on slopes steeper than three to one or on areas too small to be seeded with a force feed drill, seed may be sown by power sprayers, blowers, or other approved methods. Grass drills shall be calibrated to ensure proper seeding rates (pure live seed rate divided by purity and germination percentages) for calibrating the drill. The soil shall be repacked immediately after the seed is applied to firm the soil around the seed. All equipment shall be in good working order and shall be approved by the ENGINEER.

Kentucky Bluegrass shall be seeded a very shallow depth or on the surface and cultipacked.

No seed shall be sown during winds that are strong enough to prevent it from being properly imbedded into the surface.

No seed shall be sown in standing water or frozen ground.

When specified, mulching shall be applied immediately or within 24 hours after seed application in accordance with Section 1203.

1202-3.4 ESTABLISHING GRASS STAND. The seeded area shall be kept moist until it has germinated and its continued growth assured. In all cases, watering shall be done in a manner which will avoid erosion from the application of excessive quantities and will avoid damage to the finished surface. Water will be considered incidental to the items "Seed."

All seeded areas shall be protected against traffic or other use by warning signs or barricades approved by the ENGINEER.

Additional watering during dry periods and mowing of seeded areas shall be performed until the stand is firmly established. Weeds or other undesirable vegetation shall be rotary mowed above the new grass seedlings before they reach a height of six inches, and the clippings shall be raked and removed from the area.

Broadleaf weeds shall be controlled by rotary mowing or by applying a post emergence herbicide in accordance with North Dakota State University Weed Control Guide and manufacturer’s recommendations after majority of grass plants have three leaves or more and weeds reach a 4-inch height.

1202-3.5 GRASS STAND ACCEPTANCE. To determine adequacy of stands and to determine if reseeding or reinforcement seeding is required, the stand shall be evaluated by the ENGINEER and shall meet the following requirements before the grass stand is accepted: Seedling emergence shall be uniform over the entire area.

Stand counts shall indicate a density of at least 20 to 30 seedlings per square foot of area. Twenty seedlings per square foot for rhizomatous type species and 30 for a bunch type or a mixture of bunch type and rhizomatous type.

The CONTRACTOR shall furnish and replace without compensation therefor, any seed for areas that have not germinated, have died, or are damaged to the extent that replacement is required to conform to the requirements outlined above. The contract warranty period shall also apply to this item.

1202-3.6 MAINTENANCE OF ACCEPTED SEED STAND. The intent of this specification is to provide for maintenance of the new growth of grass beyond the date of grass stand acceptance. During the maintenance period, which is from the date of the grass stand acceptance to the date of acceptance of the contract for final payment, the grass stand shall be mowed, watered, fertilized, and/or protected from damage by erosion, traffic, or weeds in order to maintain a healthy regrowth of grass in the seeded area. This maintenance shall be paid for under a separate bid item from the seeding.

1202-4 MEASUREMENT AND PAYMENT

1202-4.1 SEEDING CLASS I. Seeding Class I shall be measured by the square yard (SY) and paid for at the unit price bid for "Seeding Class I" complete in place and accepted by the ENGINEER.

1202-4.2 SEEDING CLASS II. Seeding Class II shall be measured by the square yard (SY) and paid for at the unit price bid for "Seeding Class II" complete in place and accepted by the ENGINEER.

1202-4.3 SEEDING CLASS III. Seeding Class III shall be measured by the square yard (SY) and paid for at the unit price bid for "Seeding Class III" complete in place and accepted by the ENGINEER.

1202-4.4 SEEDING CLASS IV. Seeding Class IV shall be measured by the square yard (SY) and paid for at the unit price bid for "Seeding Class IV" complete in place and accepted by the ENGINEER.

1202-4.5 SEEDING CLASS V. Seeding Class V shall be measured by the square yard (SY) and paid for at the unit price bid for "Seeding Class V" complete in place and accepted by the ENGINEER.

1202-4.6 SEEDING CLASS VI. Seeding Class VI shall be measured by the square yard (SY) and paid for at the unit price bid for "Seeding Class VI" complete in place and accepted by the ENGINEER.

1202-4.7 GRASS MAINTENANCE. Grass Maintenance shall be measured by the lump sum (LS) and paid for at the unit price bid for "Grass Maintenance" complete in place and accepted by the ENGINEER.

SECTION 1203 – SODDING

1203-1 DESCRIPTION

This item shall consist of furnishing, hauling, and placing approved live sod on prepared areas in accordance with this specification at the locations shown on the plans or as directed by the ENGINEER.

1203-2 MATERIALS

1203-2.1 SOD. Sod furnished by the CONTRACTOR shall have a good cover of living or growing grass. This shall be interpreted to include grass that is seasonally dormant during the cold or dry seasons and capable of renewing growth after the dormant period. All sod shall be obtained from where the soil is reasonably fertile and contains a high percentage of loamy topsoil. Sod shall be cut or stripped from living, thickly matted turf relatively free of weeds or other undesirable foreign plants, large stones, roots, or other materials which might be detrimental to the development of the sod or to future maintenance. At least 70 percent of the plants in the cut sod shall be composed of the species stated in the special provisions, and any vegetation more than 6 inches in height shall be mowed to a height of 3 inches or less before sod is lifted. Sod, including the soil containing the roots and the plant growth shown above, shall be cut uniformly to a thickness not less than that stated in the special provisions.

1203-2.2 LIME. Lime, if specified, shall conform to the requirements of Subsection 1202-2.3.

1203-2.3 FERTILIZER. Fertilizer, if specified, shall conform to the requirements of Subsection 1202-2.4.

1203-2.4 WATER. The water shall be sufficiently free from oil, acid, alkali, salt, or other harmful materials that would inhibit the growth of grass. It shall be subject to the approval of the ENGINEER prior to use.

1203-2.5 SOIL FOR REPAIRS. The soil for fill and topsoiling of areas to be repaired shall conform to the requirements of Subsection 1202-2.5.

1203-3 CONSTRUCTION REQUIREMENTS

1203-3.1 GENERAL. Areas to be solid, strip, or spot sodded shall be shown on the plans. Areas requiring special ground surface preparation such as tilling and those areas in a satisfactory condition which are to remain undisturbed shall also be shown on the plans.

Suitable equipment necessary for proper preparation of the ground surface and for the handling and placing of all required materials shall be on hand, in good condition, and shall be approved by the ENGINEER before the various operations. The

CONTRACTOR shall demonstrate to the ENGINEER before starting the various operations that the application of required materials will be made at the specified rates.

1203-3.2 PREPARING THE GROUND SURFACE. After grading of areas has been completed and before applying fertilizer and limestone, areas to be sodded shall be raked or otherwise cleared of stones larger than 2 inches in any diameter, sticks, stumps, and other debris which might interfere with sodding, growth of grasses, or subsequent maintenance of grass covered areas. If any damage by erosion or other cause occurs after grading of areas and before beginning the application of fertilizer and ground limestone, the CONTRACTOR shall repair such damage. This may include filling gullies, smoothing irregularities, and repairing other incidental damage.

1203-3.3 APPLYING FERTILIZER AND GROUND LIMESTONE. Following ground surface preparation, fertilizer shall be uniformly spread at a rate which will provide not less than the minimum quantity of each fertilizer ingredient, as stated in the special provisions. If use of ground limestone is required, it shall then be spread at a rate which will provide not less than the minimum quantity stated in the special provisions. These materials shall be incorporated into the soil at a depth of not less than 2 inches by disking, raking, or other methods acceptable to the ENGINEER. Any stones larger than 2 inches in any diameter, large clods, roots, and other litter brought to the surface by this operation shall be removed.

1203-3.4 OBTAINING AND DELIVERING SOD. After inspection and approval of the source of sod by the ENGINEER, the sod shall be cut with approved sod cutters to such a thickness that after it has been transported and placed on the prepared bed, but before it has been compacted, it shall have a uniform thickness of not less than 2 inches. Sod sections or strips shall be cut in uniform widths, not less than 10 inches, and in lengths of not less than 18 inches, but of such length as may be readily lifted without breaking, tearing, or loss of soil. Where strips are required, the sod must be rolled without damage with the grass folded inside. The CONTRACTOR may be required to mow high grass before cutting sod.

The sod shall be transplanted within 24 hours from the time it is stripped, unless circumstances beyond the CONTRACTOR's control make storing necessary. In such cases, sod shall be stacked, kept moist, and protected from exposure to the air and sun and shall be kept from freezing. Sod shall be cut and moved only when the soil moisture conditions are such that favorable results can be expected. Where the soil is too dry, permission to cut sod may be granted only after it has been watered sufficiently to moisten the soil to the depth the sod is to be cut.

1203-3.5 LAYING SOD. Sodding shall be performed only during the seasons when satisfactory results can be expected. Frozen sod shall not be used and sod shall not be placed upon frozen soil. Sod may be transplanted during periods of drought with the approval of the ENGINEER, provided the sod bed is watered to moisten the soil to a depth of at least 4 inches immediately prior to laying the sod.

The sod shall be moist and shall be placed on a moist earth bed. Pitchforks shall not be used to handle sod and dumping from vehicles shall not be permitted. The sod shall be carefully placed by hand, edge to edge and with staggered joints, in rows at right angles to the slopes, commencing at the base of the area to be sodded and working upward. The sod shall immediately be pressed firmly into contact with the sod bed by tamping or rolling with approved equipment to provide a true and even surface, and insure knitting without displacement of the sod or deformation of the surfaces of sodded areas. Where the sod may be displaced during sodding operations, the workmen when replacing it shall work from ladders or threaded planks to prevent further displacement. Screened soil of good quality shall be used to fill all cracks between sods. The quantity of the fill soil shall not cause smothering of the grass. Where the grades are such that the flow of water will be from paved surfaces across sodded areas, the surface of the soil in the sod after compaction shall be set approximately 1 inch below the pavement edge. Where the flow will be over the sodded areas and onto the paved surfaces around manholes and inlets, the surface of the soil in the sod after compaction shall be placed flush with the pavement edges.

On slopes steeper than 1 vertical to 2½ horizontal and in V-Shaped or flat bottom ditches or gutters, the sod shall be pegged with wooden pegs not less than 12 inches in length and have a cross sectional area of not less than 3/4 square inch. The pegs shall be driven flush with the surface of the sod.

1203-3.6 CLEANUP. After the staking has been completed, the surface shall be cleaned of loose sod, excess soil, or other foreign materials before watering.

1203-3.7 WATERING. Adequate water and watering equipment must be on hand before sodding begins and sod shall be kept moist until it has become established and its continued growth assured. In all cases, watering shall be done in a manner which will avoid erosion from the application of excessive quantities and will avoid damage to the finished surface.

1203-3.8 ESTABLISHING TURF

(a) General. The newly placed sod shall be kept in good condition during the care period following placement. The care period after placement of the sod shall be 14 days' duration for sod placed during season before July 15 and after September 15; and shall be 21 days' duration for sod placed between July 15 and September 15.

The time between October 15 of any year and April 15 of the following year shall not be considered to be a part of the required care period for sod. Sod replaced after October 15 of any year, or sod placed at a time when the care period for that sod extends past October 15, shall show evidence of establishing growth after April 15 of the following year before its care period will be considered concluded.

Water shall be applied to the sod during the care period according to the following schedule:

Immediately after sod replacement	- 5 gals./sq. yd.
7 days after sod placement	- 5 gals./sq. yd.
14 days after sod placement	- 5 gals./sq. yd.

For sod placed between July 15 and September 15, an additional 5 gals./sq. yd. shall be applied 21 days after sod placement.

Water shall be applied by sprinkling or any method approved by the ENGINEER that prevents wasting the water by runoff from the sod area. If necessary to prevent runoff several hours of application of the water may be required. The amount of water to be applied may be reduced by the ENGINEER if in his opinion there has been enough rainfall to warrant a reduction.

The CONTRACTOR shall furnish and replace without any compensation therefor, any sod that dies or is damaged to the extent replacement is required during the care period. Replacement sod shall be installed under the same specification requirements as those for the original sod being replaced, including the care period.

Water will be considered incidental to the item "Sodding."

(b) Protection. All sodded areas shall be protected against traffic or other use by warning signs or barricades approved by the ENGINEER.

(c) Mowing. The CONTRACTOR shall mow the sodded areas with approved mowing equipment, depending upon climatic and growth conditions and the needs for mowing specific areas. In the event that weeds or other undesirable vegetation are permitted to grow to such an extent that, either cut or uncut, they threaten to smother the sodded species, they shall be mowed and the clippings raked and removed from the area.

1203-3.9 REPAIRING. When the surface has become gullied or otherwise damaged during the period covered by this contract, the affected areas shall be repaired to re-establish the grade and the condition of the soil, as directed by the ENGINEER, and shall then be re-sodded as specified in Subsection 1203-3.5.

1203-4 MEASUREMENT AND PAYMENT

1203-4.1 SODDING. Sodding shall be measured by the square yard (SY) and paid for at the unit price bid for "Sodding" complete in place and accepted by the ENGINEER.

SECTION 1204 – MULCHING

1204-1 DESCRIPTION

This item shall consist of furnishing, hauling, placing, and securing mulch on surfaces indicated on the plans or designated by the ENGINEER. The mulch is used to conserve moisture, prevent surface compaction or crushing, reduce runoff and erosion, control weeds, and help hasten establishment of plant cover.

1204-2 MATERIALS

1204-2.1 MULCH MATERIAL. Acceptable mulch shall be the materials listed below or any approved locally available material that is similar to those specified. Low graded, musty, spoiled, partially rotted hay, straw, or other materials unfit for animal consumption will not be acceptable. Mulch materials which contain matured seed of species which would volunteer and be detrimental to the proposed over seeding, or to surrounding farmland, will not be acceptable. Straw or other mulch material which is fresh and/or excessively brittle, or which is in such an advanced stage of decomposition as to smother or retard the planted grass, will not be acceptable.

(a) Hay. Hay shall be native hay, Sudan grass hay, broomsedge hay, legume hay, or similar hay or grass clippings. Average length shall be 10 inches. Leguminous plants shall not exceed 25 percent of the dry weight of the mulch.

(b) Straw. Straw shall be the threshed plant residue of oats, wheat, barley, rye, or rice from which the grain has been removed. Average length shall be 6 inches if anchored by asphalt or netting or 10 inches if anchored mechanically.

(c) Stalks. Stalks shall be the whole or shredded stems of corn, cane, sorghum, flax, sunflowers, potato vines, or other coarse stemmy material.

(d) Manure. Manure shall be fresh or partially decomposed strawy stable manure containing not over 25 percent of solid material by volume.

(e) Hay Mulch Containing Seed. Hay mulch shall be mature hay containing viable seed of native grasses or other desirable species stated in the special provisions or as approved by the ENGINEER. The hay shall be cut and handled so as to preserve the maximum quantity of viable seed. Hay mulch which cannot be hauled and spread immediately after cutting shall be placed in weather resistant stacks or baled and stored in a dry location until used.

(f) Manufactured Mulch. Cellulose-fiber or wood pulp mulch shall be products commercially available for use in spray applications. Wood cellulose fiber mulch shall consist of wood cellulose fiber pulp and fiber coatings which shall contain no germination or growth in inhibiting factors. This mulch shall be free of contamination from noxious weed seed, seed from other competitive plants, mold, or fungus. It shall be dyed an appropriate color to allow visual metering of its application, and shall have

the property of becoming dispersed and suspended when agitated in water. When sprayed uniformly on the surface of the soil, the fibers shall form a blotter-like ground cover that readily absorbs water and allows infiltration to the underlying soil.

Weight specifications from suppliers, and for all applications, shall refer only to air-dry weight of the fiber, a standard equivalent to 10 percent moisture. Each package of the cellulose fiber shall be marked by the manufacturer to show the air dry weight content. Suppliers shall certify, upon request of the ENGINEER, that laboratory and field testing of their product has been accomplished and that it meets the foregoing requirements and intent. Sampling and testing for moisture content will be in accordance with ASTM D2016, Over Drying Method.

(g) Asphalt Binder. Asphalt Binder material shall conform to the requirements of ASTM D977, Type SS-1 or RS-1, as appropriate.

(h) Mulch Blanket.

1. The excelsior blanket shall consist of a machine produced mat of curled wood excelsior of 80 percent 6-inch or longer fiber length with consistent thickness and the fiber evenly distributed over the entire area of the blanket. The tope side of each blanket shall be covered with a 2-inch by 1-inch biodegradable mesh. The blanket shall be smolder resistant. The blanket shall be secured to the ground with wire staples .091-inch diameter or greater. Staples will be "U" shaped with legs 6 inches in length with a 1-inch crown.

   The excelsior erosion blankets will be equivalent to the "Curlex" (trademark) blanket manufactured by the American Excelsior Company, Arlington, Texas.

2. Paper fabric blanket shall consist of a knitted construction of yarn interwoven with strips of biodegradable paper as manufactured by Gulf States Paper Corporation or equal. The paper strips and yarn shall degrade without residue. Staples shall be high carbon iron 6 inches to 12 inches long. Paper fabric shall be 0.05 to 0.30 pounds per square yard (±10%) per manufacturer's recommendation for fabric degradation timing to produce grass stand specified.

(i) Mulch Net. Mulch net shall consist of a biodegradable net made from extruded oriented polypropylene as manufactured by American Excelsior Company or equal. Mulch netting shall be stranded with approximately 5/8-inch by 3/4-inch mesh opening (maximum 1½ inches by 3 inches) to hold loose straw, hay, bark, wood chips, and other loose mulches in place.

(j) Hydro-Mulch. Mulch to be used shall consist of a wood cellulose fiber that has not been treated with any germination or growth inhibitive substances. The mulch shall be treated with a tack and fiber to enhance seed and mulch placement and adherence to the soil. The mulch shall be free of contamination from noxious weed seed and seed from competitive plants.

1204-2.2 INSPECTION. Within five (5) days after acceptance of the bid, the ENGINEER shall be notified of sources and quantities of mulch materials available, and the CONTRACTOR shall furnish him with representative samples of the materials to be used. These samples may be used as standards with the approval of the ENGINEER, and any materials brought on the site which do not meet these standards shall be rejected.

1204-3 CONSTRUCTION REQUIREMENTS

1204-3.1 MULCHING. Before spreading mulch, all large clods, stumps, stones, brush, roots, and other foreign material shall be removed from the area to be mulched. Mulch shall be applied immediately after seeding or within 24 hours. The spreading of the mulch may be by hand methods, blower, or other mechanical methods, provided a uniform covering is obtained. When spread by hand, the bales of hay must be torn apart, "fluffed up," and spread uniformly over the area. Mulches shall not be applied when velocities exceed 15 miles per hour. If excessive breakage of mulch occurs during spreading or anchoring, mulch shall be "wet down" with sprinkler or other suitable means.

Straw or hay shall be spread over the surface to form a uniform thickness to provide a loose depth of not less than 1½ inches nor more than 3 inches. Other organic material shall be spread at the rate directed by the ENGINEER. Mulch may be blown on the slopes, and the use of cutters in the equipment for this purpose will be permitted to the extent that at least 95 percent of the mulch in place on the slope shall be 6 inches or more in length. When mulches applied by the blowing method are cut, the loose depth in place shall not be less than 1 inch nor more than 2 inches.

TABLE OF MULCH APPLICATION RATES

Mulch	Anchoring Method	Rate (lbs/acre)	Rate of Asphalt Emulsion Track Gal/Acre
Native or Tame Hay	Mulch Tiller	3000-4000*	-
Native or Tame Hay	Asphalt or Resin Emulsion	3000	300
Small Grain Straw	Mulch Tiller	4000-5000*	-
Small Grain Straw, Flax	Asphalt or Resin Emulsion	3000	300
Flax	Mulch Tiller	3000-5000*	-
Manure	None	30,000-40,000	-

Manure	Disk	60,000-80,000	-
Wood Cellulose Fiber	Hydraulic Spray Equipment	1500-2000	-
Hydro	Spray Equipment	2000	-

*Other methods as hand anchorage, netting, and peg and string method use 3000 lbs/acre.

1204-3.2 SECURING MULCH. The mulch shall be held in place by light disking, a very thin covering of topsoil, small brush, pins, stakes, wire mesh, asphalt, binder, or other adhesive material approved by the ENGINEER. Where mulches have been secured by either of the asphalt binder methods, it will not be permissible to walk on the slopes after the binder has been applied. The CONTRACTOR is warned that in the application of asphalt binder material, he must take every precaution to guard against damaging or disfiguring structures or property on or adjacent to the areas worked and that he will be held responsible for any such damage resulting from his operations.

(a) If the "Peg and String" method is used, the mulch shall be secured by the use of stakes or wire pins driven into the ground on 5-foot centers or less. Binder twine shall be strung between adjacent stakes in straight lines and crisscrossed diagonally over the mulch, after which the stakes shall be firmly driven nearly flush to the ground to draw the twine down tight onto the mulch.

(b) Mulch Nettings – Staple paper, cotton, or plastic netting to the soil surface according to manufacturer's recommendations.

(c) Hand Anchorage – With a square pointed spade, punch mulch into the surface soil in contour rows 12 inches apart.

(d) Mechanical Mulch Anchoring or Crimping -

1. Tools – Use a heavy, straight coulter type mulch tiller (Imco). The coulters should be 1/4-inch thick and be of sufficient diameter to prevent the frame from dragging the mulch. The edges should be dull so as not to cut the mulch during the anchoring operation. The edges may be serrated or smooth; if serrated, the scallops should not be more than 3 inches in length and 3/4 inch in depth. The rows or furrows made by the mulch tiller shall be spaced 6 to 12 inches apart. Penetration depth should be 2 to 3 inches. The mulch should not be covered with excessive amounts of soil. Limit to no more than two (2) passes by the mulch tiller. All mulching operations will be done on the approximate contour.

2. Site Preparation – When using a mulch anchoring tool, the seed bed must be loosened to a minimum depth of 3 inches prior to placing and anchoring mulch material. This is necessary for the 2- or 3-inch preparation required for mulch

anchorage. (Drill or seeding equipment used at this time must be equipped with depth bands as the ability to obtain a firm seed bed is improbable.)

(e) Asphalt Emulsion Mulch Tack – Asphalt emulsion shall be continuously applied with an emulsion spray system equipment with a mechanical mulch hay blower. Application temperature shall be 50°F or greater (air temperature). The asphalt shall be applied with a mechanical mulch blower equipped with an emulsion sprayer system having a heating unit.

(f) Resin Emulsion Mulch Tack – The resin shall be applied with a mechanical mulch blower equipped with an emulsion spray system having a heating unit.

(g) Wood cellulose fiber mulch shall be applied with hydraulic spray equipment at the rate of 1,500 to 2,000 pounds per acre. The fiber shall be added to the water slurry in a hydraulic seeder along with the proportionate quantities of seed, fertilizer, and other approved materials. All ingredients shall be mixed to form a homogeneous slurry. Using the color of the mulch material as a metering agent, one shall uniformly spray the slurry mixture on the prepared seed bed.

A non-toxic, organic soil stabilizer may be included or added to the wood cellulose fiber where there is a high probability of wind or water erosion. Application rates of such soil stabilizers will be at the manufacturer's recommendation rates.

Since this method is basically a broadcast (surface) application of seed, the mulched area shall be kept moist by sprinkler or other means for a period of thirty (30) days. Under conditions of extreme winds, some peeling may occur. The mulch also is subject to washing away under intense or prolonged rains. These factors should be considered in selecting this method of mulching.

(h) Mulch blankets may be primarily used to mulch small critical areas (such as ditch bottoms and slopes greater than 3:1) and shall be applied in accordance with the manufacturer's recommendations. When the blanket is unrolled, the netting shall be on top and the fibers in contact with the soil over the entire area. In channels, the blankets shall be applied in the direction of the flow of water. On slopes, the blankets shall be applied across the slope. Ends and sides shall be butted snugly and stapled, in both instances.

The staples shall be driven vertically into the ground, spaced approximately 2 linear yards apart, on each side of the blanket, and one row in the center alternately spaced between each side. Use a common row of staples on adjoining blankets.

(i) If the "Asphalt Spray" method is used, all mulched surfaces shall be sprayed with asphalt binder material so that the surface has a uniform appearance. The binder shall be uniformly applied to the mulch at the rate of approximately 8.0 gallons per 1,000 square feet, or as directed by the ENGINEER, with a minimum of 6.0 gallons and a maximum of 10 gallons per 1,000 square feet depending on the type of mulch and the effectiveness of the binder securing it. Bituminous binder material may be sprayed on

the mulch's slope areas from either the top or the bottom of the slope. An approved spray nozzle shall be used. The nozzle shall be operated at a distance of not less than 4 feet from the surface of the mulch and a uniform distribution of the bituminous material shall be required. A pump or an air compressor of adequate capacity shall be used to insure uniform distribution of the bituminous material.

(j) If the "Asphalt Mix" method is used, the mulch shall be applied by blowing, and the asphalt binder material shall be sprayed into the mulch as it leaves the blower. The binder shall be uniformly applied to the mulch at the rate of approximately 8.0 gallons per 1,000 square feet or as directed by the ENGINEER, with a minimum of 6.0 gallons and a maximum of 10 gallons per 1,000 square feet depending on the type of mulch and effectiveness of the binder securing it.

(k) If the hydro-mulch method is used, the mulch shall be uniformly applied at the application rate shown and shall cover a minimum of 95 percent of the seedbed area. After application, the mulch shall permit percolation of water to the underlying soil.

1204-3.3 CARE AND REPAIR

(a) The CONTRACTOR shall care for the mulched areas until final acceptance of the project. Such care shall consist of providing protection against traffic or other use by placing warning signs as approved by the ENGINEER, and erecting any barricades that may be shown on the plans before or immediately after mulching has been completed on the designated areas.

(b) The CONTRACTOR shall be required to repair or replace any mulching that is defective or becomes damaged until the project is finally accepted. When, in the judgment of the ENGINEER, such defects or damages are the result of poor workmanship or failure to meet the requirements of the specifications, the cost of the necessary repairs or replacement shall be borne by the CONTRACTOR. However, once the CONTRACTOR has completed the mulching of any area in accordance with the provisions of the specifications and to the satisfaction of the ENGINEER, no additional work at his expense will be required, but subsequent repairs and replacements deemed necessary by the ENGINEER shall be made by the CONTRACTOR and will be paid for as additional or extra work.

1204-4 MEASUREMENT AND PAYMENT

1204-4.1 MULCHING. Mulching shall be measured by the square yard (SY) and paid for at the unit price bid for "Mulching" complete in place and accepted by the ENGINEER.

SECTION 1205 – MANHOLES AND INLETS

1205-1 DESCRIPTION

These items shall consist of the construction or installation of manholes and inlets, in accordance with these specifications, at the specified locations and Standard Details and conforming to the lines, grades, and dimensions shown on the plans or required by the ENGINEER.

1205-2 MATERIALS

1205-2.1 CONCRETE. Plain and reinforced concrete used in this work shall conform to the requirements of Section 501, "Portland Cement Concrete Pavement."

1205-2.2 MORTAR. Mortar shall be a compound of one (1) part Portland Cement to two (2) parts of sand by volume to which lime may be added not to exceed 10 percent of the cement by weight.

1205-2.3 PRECAST REINFORCED CONCRETE PIPE MANHOLE. Precast reinforced concrete manhole risers and top sections shall conform to ASTM C478.

All barrel-to-barrel joints shall be sealed using a Cretex P2 gasketed joint for 48-inch manholes, a Cretex CX-4 joint for all other sizes of manholes, or an exterior seal by Press-Seal Gasket Corporation EZ Wrap and EZ Stik No. 4 primer, Cretex Speciality Products “Mac Wrap” for all sizes of manholes, or an approved equal. The height of the manhole shall be shown on the plans and the diameter shall be 48 inches minimum or larger if recommended by the manhole fabricator and approved by the ENGINEER.

Steps shall not be placed in sanitary sewer, storm sewer, or air release manholes or inlets unless specified. If specified, the manhole steps to be furnished and installed shall be rubber coated over steel reinforcing of the type manufactured by the Delta Products (Delta-Surefoot Company) or approved equal.

1205-2.4 PRECAST REINFORCED CONCRETE PIPE MANHOLE WITH MONOLITHIC BASE. Precast reinforced concrete risers and top sections shall conform to ASTM C478. Manhole bases shall extend a minimum of 6 inches past the exterior manhole wall, except bases below M.S.L. elevation 1626 (NGVD29), which shall extend 12 inches past the exterior manhole wall. The base and the bottom section shall be cast monolithically with precast flow lines. The pipe connections to the manhole shall be Press-Seal Gasket Corporation model Press-Boot or an approved equal. All barrel to barrel joints shall be sealed using a Cretex P2 gasketed joint for 48-inch manholes, a Cretex CX-4 joint for all other sizes of manholes, an exterior seal by Press-Seal Gasket Corporation EZ Wrap and EZ Stik No. 4 primer, Cretex Specialty Products "Mac Wrap" for all sizes of manholes, or an approved equal. If specified, the barrel to casting joint shall be sealed using Cretex Specialty Products "Internal Chimney Seal" or an approval equal. All barrel sections below M.S.L. elevation 1628 (NGVD29) shall be restrained using three outside Cretex pipe joint ties equally spaced or an approved equal. The

height of the manhole shall be shown on the plans and the diameter shall be 48 inches minimum or larger if recommended by the manhole fabricator and approved by the ENGINEER.

Steps shall not be placed in sanitary sewer, storm sewer, or air release manholes or inlets unless specified. If specified, the manhole steps to be furnished and installed shall be rubber coated over steel reinforcing of the type manufactured by the Delta Products (Delta-Surefoot Company) or approved equal.

1205-2.5 MANHOLE CASTINGS

(a) Sanitary Sewer, Storm Sewer, and Water Main Manhole Castings. Manhole frames and covers shall be of the type manufactured by the Neenah Foundry Company Number R-1733, East Jordan Iron Works Number 1205 or Municipal Castings, Inc. Number 301 with concealed pick holes and self sealing Platen lid or approval equal.

(b) Sanitary Sewer, Storm Sewer, and Water Main Floating Manhole Castings. Floating manhole frames and covers shall be of the type manufactured by Neenah Foundry Company Number R-1955-1 with concealed pick holes and self-sealing Platen lid or approved equal.

1205-2.6 INLET CASTINGS. Inlet castings shall be of the type manufactured by Neenah Foundry Company with Type V Grates and NDDDOT Style Backs, East Jordan Iron works with M6 Type Grate and Type T2 Back for Type 24-inch and with type M4 Grate and Type T5 Back for Type 36-inch or larger, or an approved equal. All bolts to be temper finish, double heat treated 1038 S.A.E., Grade 5, Cad-Dichromate plated.

(a) Type 24" Castings. Type 24" Castings shall be Neenah Foundry Number R-3030, East Jordan Iron Works Number 7010 with round base, or approved equal.

(b) Type 36" Castings. Type 36" Inlet Castings shall be a Neenah Foundry Number R-3295, East Jordan Iron Works Number 7030, or approved equal.

(c) Type 72" Castings. Type 72" Castings shall be Neenah Foundry Number R-3295-2, East Jordan Iron Works Number 7031, or approved equal.

(d) Type 108" or Larger Castings. Type 108" or Larger Castings shall be Neenah Foundry Number R-3295-3, or East Jordan Iron Works Number 7032 with additional inner sections, or approved equal.

(e) Catch Basin Castings. Catch basin castings shall be Neenah Foundry Number R-2573 with concave grate or approved equal.

1205-2.7 SLOTTED DRAIN INLET. Slotted drain inlets shall be of a quality equal to the type manufactured by Contech Construction Products with the modified hugger band under the minimum requirements in design, material, and workmanship conforming to the latest standards of AASHTO M36 and AASHTO M111.

1205-2.8 REINFORCING STEEL. Reinforcing steel used in this work shall conform to Subsection 501-2.10.

1205-2.9 AIR RELEASE VALVE. All air release valve taps, made into all sizes and classes of PVC and ductile iron water mains, shall be reinforced with a tapping saddle. Tapping saddles shall be a minimum of 2-bolt stainless steel skirted or complete gasket type. An O-ring single bolt stainless steel saddle is not acceptable. The automatic air release valve shall be a 1-inch APCO No. 200 or Valmatic Model 38 for water and APCO No. 400 or Valmatic Model 48 for sewer or an approved equal. The corporation stop shall be a Mueller No. H-15000 for copper water pipe or an approved equal.

1205-2.10 PRECAST REINFORCED CONCRETE MANHOLE BASES. Precast reinforced concrete manhole bases shall conform to ASTM C478. The bases shall extend a minimum of 6 inches past the exterior manhole wall, except bases below M.S.L. elevation 1626, which shall extend 12 inches past the exterior manhole wall. Base thickness shall be as follows: Manholes with inside diameters up to and including 48"- 6" thick, 54" thru 102"- 8" thick, 108" and 120" - 12" thick. Precast Air Release Manhole bases shall be 2 inches thicker than the base thicknesses listed above.

1205-2.11 PRECAST REINFORCED CONCRETE MANHOLE COVERS. Precast Reinforced Concrete Manhole Covers shall conform to ASTM C478. Cover thickness shall be as follows: Manholes with inside diameters up to and including 48"- 6" thick, 54" thru 102"- 8" thick, and 108" and 120"- 12" thick.

1205-3 CONSTRUCTION REQUIREMENTS.

1205-3.1 EXCAVATION. Excavation for catch basins, manholes, inlets, and pipe junctions shall be done in a manner to provide adequate room for the construction of the item according to details shown on the plans. When necessary the excavation shall be adequately shored or sheeted to insure safe and satisfactory construction and backfilling.

1205-3.2 PRECAST REINFORCED CONCRETE PIPE MANHOLES AND INLETS. Unless otherwise specified, standard reinforced concrete sewer pipe shall be used for this purpose. When this type of construction is used, the bottom precast section shall be set in a full mortar bed and the joints between sections and around pipes shall be filled with mortar.

1205-3.3 CONCRETE CONSTRUCTION (CAST IN PLACE). The composition, consistency, placing, form work, curing and protection of the concrete shall conform to the requirements of Section 701. No finishing of the concrete will be required except the filling of honeycombed areas.

1205-3.4 CONCRETE BASE. The bottoms of all manholes and inlets shall be of concrete. The thickness and other dimensions of the base shall be as specified on the plans. The invert channel shall be the true shape of the lower half of the pipe or sewer.

Pipe or tile placed in concrete for inlet or outlet connections shall extend through the walls a sufficient distance to allow for connections, and the concrete shall be carefully constructed around them so as to prevent leakage along their outer surface. The inside ends shall be flush with the inside walls, and the pipe shall be of the same size and kinds as those with which they connect on the outside.

1205-3.5 CASTINGS. All manhole, inlet, and catch basin castings shall be placed with a minimum of 1/2 inch of grout between the manhole inlet or catch basin, but not adjusted to grade unless specified on the plans. Total allowance for adjustment shall be from 0 to 6 inches. Castings requiring adjustment to grade shall be paid for under Section 1206 "Castings and Adjustment." All inlet castings shall be placed on the inlet facing the roadway with bolts, washers, and nuts installed in accordance with Standard Detail 1206-1.

1205-3.6 SLOTTED DRAIN INLET. Slotted drain inlets shall be constructed in compliance with Standard Details 1205-9 and 1205-10. The CONTRACTOR shall furnish all equipment, labor, and materials, including the connection to the inlet or manhole, flowable fill for bedding and curb and gutter, all of which shall be considered incidental to the price for slotted drain.

1205-3.7 BACKFILL. Backfill shall be deposited in horizontal layers not over 6 inches in depth (loose) and each layer compacted, this process being repeated to the elevation of the finished grade as designated on the plans. Compaction shall be secured by watering each layer if dry (the water content of the material used shall not exceed the optimum moisture content) and tamping with approved mechanical rammers. The backfill shall be compacted to a density equal to the requirements specified for the pipe trench common to the manhole or inlet.

1205-3.8 CLEANING. All manholes and inlets shall be thoroughly cleaned of any accumulation of silt, debris, or foreign matter of any kind, and shall be free from such accumulations at the time of the final inspection.

1205-3.9 MARKING MANHOLES AND INLETS. The CONTRACTOR will be required to furnish and install a "Tee" or "U" steel fence post having a minimum length of 5½ feet located 1 foot from the edge of the casting in line with the steps of the manhole or in line with the face of the curb of an inlet.

The cost of the steel fence post and installation shall be considered incidental to other bid items.

1205-3.10 POLYVINYL CHLORIDE PIPE TO MANHOLE ADAPTERS. The CONTRACTOR shall install a PVC to MH adapter in the wall of any manhole connected to PVC sewer pipe. The PVC Manhole Adaptors shall be equal to the product and manufactured by GPK Products, Inc. or an approved equal.

The cost of the PVC Manhole Adaptor and the installation shall be considered incidental to the bid item for "Concrete Manhole."

1205-3.11 INLET STAKES. Section 100, Subsection 116, shall be strictly followed. The same line and grade stakes set by the ENGINEER for the construction of each inlet shall be saved and used by the CONTRACTOR to set the inlet castings to line and grade.

1205-4 MEASUREMENT AND PAYMENT

1205-4.1 CONCRETE MANHOLE. Concrete manholes including casting shall be measured on an individual unit basis (EA) and paid for at the unit price bid for "Concrete Manhole" complete in place and accepted by the ENGINEER.

1205-4.2 CONCRETE MANHOLE WITH MONOLITHIC BASE. Concrete manholes with monolithic base including casting shall be measured on an individual basis (EA) and paid for at the unit price bid for "Concrete Manhole With Monolithic Base" complete in place and accepted by the ENGINEER.

1205-4.3 CONCRETE DROP MANHOLE. Concrete Drop Manhole including casting shall be measured on an individual unit basis (EA) and paid for at the unit price bid for "Concrete Drop Manhole" complete in place and accepted by the ENGINEER. This item to include all items shown on Standard Detail 1205-2.

1205-4.4 AIR RELEASE VALVE AND MANHOLE. Air Release Valve and Manhole including castings shall be measured as a complete unit on an individual unit basis (EA) and paid for at the unit price bid for "Air Release Valve and Manhole" complete in place and accepted by the ENGINEER. This item to include all items shown on Standard Detail 1205-11.

1205-4.5 TYPE 24" INLET. Type 24" Inlet, including casting, shall be measured on an individual unit basis (EA) and paid for at the unit price bid for "Type 24" Inlet" complete in place and accepted by the ENGINEER. This item to include all items shown on Standard Detail 1205-5.

1205-4.6 TYPE 24" INLET/MANHOLE. Type 24" Inlet/Manhole, including casting, shall be measured on an individual unit basis (EA) and be paid for at the unit price bid for "Type 24" Inlet/Manhole" complete in place and accepted by the ENGINEER. This item to include all items shown on Standard Detail 1205-5.

1205-4.7 TYPE 36" INLET. Type 36" Inlet, including casting, shall be measured on an individual unit basis (EA) and paid for at the unit price bid for "Type 36" Inlet" complete in place and accepted by the ENGINEER. This item to include all items shown on Standard Detail 1205-6 and 1205-7.

1205-4.8 TYPE 72" INLET. Type 72" Inlet, including casting, shall be measured on an individual unit basis (EA) and paid for at the unit price bid for "Type 72" Inlet" complete in place and accepted by the ENGINEER. This item to include all items shown on Standard Detail 1205-6 and 1205-7.

1205-4.9 TYPE 108" OR LARGER INLET. Type 108" Or Larger Inlet, including casting, shall be measured on an individual unit basis (EA) and paid for at the unit price bid for "Type 108" or Larger Inlet" complete in place and accepted by the ENGINEER.

1205-4.10 CATCH BASIN. Catch Basins including castings shall be measured on an individual unit basis (EA) and paid for at the unit price bid for "Catch Basin" complete in place and accepted by the ENGINEER.

1205-4.11 REMOVE EXISTING CATCH BASIN OR INLET. Removing catch basins or inlets shall be measured on an individual unit basis (EA) and paid for at the unit price bid for "Remove Existing Catch Basin or Inlet" complete and accepted by the ENGINEER. This item is to include removing entire concrete structure and backfilling excavation with bedding material. The casting shall be taken to the salvage yard at the City of Bismarck Department of Public Works at 601 South 26th Street.

1205-4.12 thru 4.18 (SIZE) INCH SLOTTED DRAIN. Slotted Drain shall be measured by the linear foot (LF) basis for "(Size) Inch Slotted Drain" complete in place and accepted by the ENGINEER. This item to include all items shown on Standard Detail 1205-9 and 1205-10.

SECTION 1206 – CASTING AND ADJUSTMENT

1206-1 DESCRIPTION

This item shall consist of furnishing and adjusting new castings on existing manholes in accordance with this section, the details and plans at the locations indicated on the plans, or as directed by the ENGINEER. This item includes adjusting new castings installed within the same project.

This item shall include the resetting of manhole frames and covers, inlet frames and covers, City water works valve boxes, or other accessories requiring adjustment to new lines and grades where such accessories are public property. Unless otherwise indicated on the plans, adjustments, replacements, and repairs to private property shall be exempt from this item.

This item shall include the furnishing of new castings, grating, or covers specifically indicated on the plans. The CONTRACTOR, however, will be required to replace, at its own expense, any damaged parts resulting from its operations.

1206-2 MATERIALS

1206-2.1 Materials shall conform to Subsection 1205-2.

1206-2.2 Flexible Foam Expansion Joint materials shall meet the requirements of ASTM D5249, TYPE 2, ASTM D1752, Sections 5.1 through 5.4 with the compression required modified to 10 psi and 25 psi maximum. This material shall be non-gassing and shall be compatible with hot pour joint sealants.

1206-3 CONSTRUCTION REQUIREMENTS

1206-3.1 GENERAL. The methods of construction shall conform insofar as applicable to the requirements of Section 1205.

Existing manholes, inlets, and valve boxes shall be adjusted to the elevation, grade, or dimensions as indicated on the plans and Standard Details or as ordered by the ENGINEER. The structures are assumed to be clean prior to the beginning of the adjustment construction unless otherwise agreed to by the CONTRACTOR and the ENGINEER. Castings shall be carefully removed and reinstalled by the CONTRACTOR as indicated. If the height of a rectangular casting is to be increased, the addition may be of solid concrete block or concrete as specified in Section 501. Solid concrete block shall not be used to increase the height of circular casting. In the event that the top part of the existing structure is weak and faulty, it shall be replaced as directed by the ENGINEER and the extension completed. Where the casting, grating, or cover is to be lowered, the masonry or concrete shall be removed to sufficient depth so that a seat of proper dimensions may be reconstructed to receive the casting, grating, or cover at the new grade. Castings shall be set in full mortar beds or otherwise secured as shown on the plans. Mortar shall be in accordance with Subsection 1205-2.2. Casting shall be

set accurately to correct elevation and line so that no subsequent adjustment will be necessary. If necessary, the CONTRACTOR shall use tapered or sloped adjusting risers.

Upon completion of the adjustment, all surplus material shall be removed, and the structure and the site of the work shall be left in a neat and clean condition. The entire structure shall be thoroughly cleaned of any accumulation of silt, debris, or foreign matter of any kind and shall be free from such accumulations at the time of final inspection.

1206-3.2 WATER STOP BOX EXTENSION. Water service stop boxes are found within the area of construction very frequently. Adjustments in elevation that can be accomplished within the range of the adjustment sleeve of the stop box shall be considered incidental to the contract bid items. The CONTRACTOR is required to use due care in making these adjustments.

If the stop box cannot be extended to the proper grade within the above limits, it shall be adjusted by removing the lid and adding the required length and diameter of standard weight pipe with a standard pipe coupling and replacing the lid. The maximum adjustment shall be 2 feet under Bid Item 1206-4.10. Adjustments over 2 feet will be paid for under Section 126 of the Standard Specifications. Adjustments 2 feet and under shall be considered incidental.

1206-3.3 WRAPPED UTILITY BOXES. Utility structures, excluding manholes, encased in concrete sidewalks and pavements, shall be wrapped with a Flexible Foam Expansion Joint. Wrapped structures include valve boxes, hydrants, curb stop boxes, street light poles and foundations, traffic signal foundations, pedestrian signal pole foundations, and street signs.

Minimum thickness of the Flexible Joint will be 1/2 inch used on curb stop boxes, hydrants, street signs, pedestrian signal foundations, and valve boxes. Minimum thickness for larger structures shall be 3/4 inch to 1 inch maximum. Wrapped utility boxes shall be considered incidental.

1206-3.4 CASTING ADJUSTMENTS. All new and existing manholes located in concrete pavement surfaces shall have floating manhole castings installed as shown in standard details 1206-3 and 1206-4. The casting shall be installed as shown on the detail.

All existing manholes outside the roadway surface that require adjustment shall be paid for under Section 1206-4.17 Adjust Manhole Casting in Unpaved Area. All existing manholes outside the roadway surface that require a new manhole casting shall have standard castings and shall be paid for under Section 1206-4.18 Furnish and Adjust Manhole Casting in Unpaved Area.

Valves, curb box extensions, and inlets shall confirm to the construction methods, and the measurement and payment shall meet the requirements of Section 1206.

1206-4 MEASUREMENT AND PAYMENT

1206-4.1 ADJUST MANHOLE CASTING IN ASPHALT PAVEMENT. This item shall be measured on an individual unit basis (EA) and paid for at the unit price bid for "Adjust Manhole Casting" complete as detailed and accepted by the ENGINEER.

1206-4.2 FURNISH AND ADJUST MANHOLE CASTING IN ASPHALT PAVEMENT. This item shall be measured on an individual unit basis (EA) and paid for at the unit price bid for "Furnish and Adjust Manhole Casting in Asphalt Pavement" complete as detailed and accepted by the ENGINEER.

1206-4.3 ADJUST TYPE 24" INLET CASTING. This item shall be measured on an individual unit basis (EA) and paid for at the unit price bid for "Adjust Type 24" Inlet Casting" complete as detailed and accepted by the ENGINEER.

1206-4.4 FURNISH AND ADJUST TYPE 24" INLET CASTING. This item shall be measured on an individual unit basis (EA) and paid for at the unit price bid for "Furnish and Adjust Type 24" Inlet Casting" complete as detailed and accepted by the ENGINEER.

1206-4.5 ADJUST TYPE 36" INLET CASTING. This item shall be measured on an individual unit basis (EA) and paid for at the unit price bid for "Adjust Type 36" Inlet Casting" complete as detailed and accepted by the ENGINEER.

1206-4.6 FURNISH AND ADJUST TYPE 36" INLET CASTING. This item shall be measured on an individual unit basis (EA) and paid for at the unit price bid for "Furnish and Adjust Type 36" Inlet Casting" complete as detailed and accepted by the ENGINEER.

1206-4.7 ADJUST TYPE 72" INLET CASTING. This item shall be measured on an individual unit basis (EA) and paid for at the unit price bid for Adjust Type 72" Inlet Casting" complete as detailed and accepted by the ENGINEER.

1206-4.8 FURNISH AND ADJUST TYPE 72" INLET CASTING. This item shall be measured on an individual unit basis (EA) and paid for at the unit price bid for "Furnish and Adjust Type 72" Inlet Casting" complete as detailed and accepted by the ENGINEER.

1206-4.9 ADJUST TYPE 108" OR LARGER INLET CASTING. This item shall be measured on an individual unit basis (EA) and paid for at the unit price bid for "Adjust Type 108" or Larger Inlet Casting" complete as detailed and accepted by the ENGINEER.

1206-4.10 FURNISH AND ADJUST TYPE 108" OR LARGER INLET CASTING. This item shall be measured on an individual unit basis (EA) and paid for at the unit price bid

for "Furnish and Adjust Type 108" or Larger Inlet Casting" complete as detailed and accepted by the ENGINEER.

1206-4.11 ADJUST VALVE BOX IN ASPHALT PAVEMENT. This item shall be measured on an individual unit basis (EA) and paid for at the unit price bid for "Adjust Valve Box" complete as detailed and accepted by the ENGINEER.

1206-4.12 WATER STOP BOX EXTENSION. This item shall be measured on an individual basis (EA) and paid for at the unit price bid for "Water Stop Box Extension" complete in place and accepted by the ENGINEER.

1206-4.13 WRAPPED UTILITY BOXES. This item shall be measured and paid at the unit price bid per each (EA) “Wrapped Utility Box” complete in place as detailed and accepted by the ENGINEER.

1206-4.14 ADJUST VALVE BOX IN CONCRETE. This item shall be measured on an individual basis (EA) and paid for at the unit price bid for “Adjust Valve Box in Concrete” complete as detailed and accepted by the ENGINEER.

Valve boxes located outside of concrete or paved areas, such as in street boulevards, shall be measured and paid for at one-half the unit price bid for “Adjust Valve Box.”

1206-4.15 ADJUST MANHOLE CASTING IN CONCRETE. This item shall be measured on an individual unit basis (EA) and paid for at the unit price bid for “Adjust Manhole Casting in Concrete.

1206-4.16 FURNISH AND ADJUST MANHOLE CASTING IN CONCRETE. This item shall be measured on an individual unit basis (EA) and paid for at the unit price bid for “Furnish and Adjust Manhole Casting in Concrete” complete as detailed and accepted by the ENGINEER.

1206-4.17 ADJUST MANHOLE CASTING IN UNPAVED AREA. This item shall be measured on an individual unit basis (EA) and paid for at the unit price bid for “Adjust Manhole Casting in Unpaved Area” complete as detailed and accepted by the ENGINEER.

1206-4.18 FURNISH AND ADJUST MANHOLE CASTING IN UNPAVED AREA. This item shall be measured on an individual unit basis (EA) and paid for at the unit price bid for “Furnish and Adjust Manhole Casting in Unpaved Area” complete as detailed and accepted by the ENGINEER.

1206-4.19 ADJUST VALVE BOX IN UNPAVED AREA. This item shall be measured on an individual unit basis (EA) and paid for at the unit price bid for “Adjust Valve Box in Unpaved Area” complete as detailed and accepted by the ENGINEER.

SECTION 1208 – CHAIN LINK FENCING

1208-1 DESCRIPTION

This item covers the requirements for furnishing materials and constructing new chain link fences and gates in accordance with the details included herein and as shown on the plans.

The fence shall be the product of a manufacturer who has demonstrated by actual installations of a similar nature that its product is of the type required. The CONTRACTOR shall include all supplementary parts necessary or required for a complete and satisfactory installation within the true meaning and intent of the drawings. All runs of the fence shall present the same general appearance, and the product of one manufacturer only will be accepted, except for items which do not influence the appearance of the completed fence. No used, rerolled, or open seam steel shall be permitted in posts, gate frames, rails, or braces.

1208-2 MATERIALS

1208-2.1 FABRIC. The chain link fence fabric shall conform to AASHTO M181, Type 1. The size of mesh shall be 2 inches and the wire shall be No. 9 gauge basic open hearth steel hot dip galvanized after weaving with a minimum of 1.20 ounces of zinc per square foot of uncoated wire surface. The wire shall have a minimum tensile strength of 80,000 psi and shall be standard finish with the top and bottom selvage knuckled.

1208-2.2 WIRE FABRIC TIES. Wire fabric ties shall be No. 9 gauge hot dip galvanized steel wire, conforming to ASTM A112, or No. 9 gauge aluminum ties, spaced 12 inches center to center on all posts and 24 inches center to center on all rails.

1208-2.3 POSTS, RAILS, AND BRACES. All posts, rails, and braces shall be hot dipped galvanized steel in accordance with AASHTO M181, Grade 2. Line and brace posts shall be 2-inch O.D., 2.75 pounds per linear foot for fabric 6 feet or less and 2 3/8-inch O.D., 3.65 pounds per linear foot for fabric from 7 feet to 10 feet. Corner posts shall be 2 3/8-inch O.D., 3.65 pounds per linear foot for fabric 6 feet or less, and 2 7/8-inch O.D., 5.79 pounds per linear foot for fabric from 7 feet to 10 feet. Top rails and braces shall be 1 5/8-inch O.D., 2.27 pounds per linear foot for all sizes fabric. Each brace section shall be diagonally trussed with 3/8-inch round hot dip galvanized steel rod with truss tightener and fittings. All posts shall be furnished with tops and required fittings for attaching fabric and rail. Fittings shall be of malleable iron or pressed steel.

1208-2.4 MISCELLANEOUS FITTINGS AND HARDWARE. Miscellaneous fittings and hardware shall be of design standard with the manufacturer. Miscellaneous fittings and hardware shall be zinc-coated steel.

1208-2.5 WELDING. Structural members of gates which are in contact shall be fully welded by a method that will procure a continuous weld on all sides and faces of joints

at exposed edges. Surplus welding material shall be removed. All factory or field welds shall be coated with a rust preventive primer and a second coat of paint.

1208-2.6 CONCRETE. Concrete for posts shall be a six (6) bag mix of approved materials.

1208-3 CONSTRUCTION REQUIREMENTS

1208-3.1 GENERAL. The fence shall be constructed in accordance with the details on the plans and as specified herein using new materials, and all work shall be performed in a workmanlike manner satisfactory to the ENGINEER. Prior to the beginning of the work or upon the request of the CONTRACTOR, the ENGINEER shall locate the position of the work by establishing and marking the property line or fence line. When directed, the CONTRACTOR shall span the opening below the fence with barbed wire fastened to stakes of the required length at locations of small drainage ditches where it is not practical to conform the fences to the general contour of the ground surface, as required. The new fence shall be permanently tied to the terminals of existing fences whenever required by the ENGINEER. The finished fence shall be plumb, taut, true to line and ground contour, and complete in every detail. When directed, the CONTRACTOR shall be required to stake down the chain link fence at several points between posts.

1208-3.2 CLEARING FENCE LINE. The site of the fence shall be sufficiently cleared of obstructions, and surface irregularities shall be graded so that the fence will conform to the general contour of the ground. The fence line shall be cleared to a minimum width of 2 feet on each side of the centerline of the fence. This clearing shall consist of the removal of all stumps, brush, rocks, trees, or other obstructions which will interfere with proper construction of the fence. Stumps within the cleared area of the fence line shall be grubbed or excavated. The bottom of the fence shall be placed a uniform distance above the ground as specified on the plans. When shown on the plans or as directed by the ENGINEER, the existing fences which coincide with or are in a position to interfere with the new fence location shall be removed by the CONTRACTOR as a part of the construction work, unless such removal is listed as a separate item in the bid schedule. All holes remaining after post and stump removal shall be refilled with suitable soil, gravel, or other material acceptable to the ENGINEER and shall be compacted properly with tampers.

The work shall include the handling and disposal of all material cleared, excavated, or removed, regardless of the type, character, composition, or condition of such material encountered.

1208-3.3 INSTALLING POSTS. All posts shall be spaced not more than 10 feet apart as shown on the plans. Terminal (end, corner, pull, and brace) and gate posts shall be set 36 inches in concrete bases as shown on the plans. All line posts shall be set 30 inches in concrete bases as shown on the plans. The top of the concrete bases shall be slightly above the ground, trowel finished, and sloped to drain away from the posts. Holes of full depth and size for the concrete bases for posts shall be dug to the size and

depth as shown on the plans. All post settings shall be done carefully so that all posts shall be vertical and in true alignment and rigidly secured in position.

On terminal (end, corner, pull, and brace) and gate posts, the post tops and brace rail clamps around the posts shall be placed before setting the posts in concrete bases. In setting the gate posts, great care must be taken to make sure that gate posts are set the exact distance apart as shown on the plans. For example, posts for a 6-foot gate must be set so as to leave an opening exactly 6 feet wide. A line drawn across from the top of one gate post to the other must be level, regardless of the grade at the ground line. If the ground is not level, the upgrade gate post shall be set first to get the proper height for the downgrade gate post. The concrete bases for end, corner, pull, brace, and gate posts shall be placed first and allowed to cure for seven (7) days. The concrete bases for line posts shall be allowed to cure for three (3) days. Stretcher bar bands and truss bands as specified on the plans shall be spread and slipped on end, corner, pull, brace, and gate posts as the next operation. Post tops are then inserted on all other posts. No extra compensation shall be made for rock excavation. Rock excavation shall not be grounds for extension of time.

1208-3.4 INSTALLING TOP RAILS. To start the installation, a length of top rail shall be run through the first couple of post tops; a rail clamp shall be assembled on the end, corner, or gate post, as the case may be. The end of the rail already placed shall be butted into the clamp and fastened. The top rail shall be installed along the run of the fence and the various sections joined with sleeve couplings. At not more than every 100 feet, an expansion coupling shall be placed to take care of expansion and contraction of the rail. The rail shall be clamped in the end, corner, or gate post at the end of the run of the installation of top rail. The fence shall be constructed in such a manner that the top rail appears straight on line and grade or flows smoothly over contours and/or around curves.

1208-3.5 INSTALLING BRACES. All horizontal braces shall be attached together with truss rods at all terminal (end, corner, and pull) and gate posts to the brace posts as shown on the plans.

1208-3.6 INSTALLING FABRIC. The fabric shall be unrolled on the outside of the fence line with the bottom edge of the fabric against the posts. The various rolls shall be spliced by bringing the ends close together and weaving in a picket in such a way that it will engage both of the roll ends and catch with each twist each separate mesh of the end pickets of both rolls of fabric. The fabric shall be raised and tied loosely to the top rail with a temporary tie wire at intervals of about 20 feet. The fabric shall be installed by a method approved by the ENGINEER. One method used is given below.

> **(a)** At end, corner, or gate posts, the stretcher bar shall be slipped through the end picket of the fabric and the stretcher bar bands at the same time. Then the bolts in the stretcher bar bands shall be tightened. Additional rolls of fabric shall be spliced and placed as the erection progresses along the fence.

(b) In the long sections, the fence shall be stretched at intervals of about 100 feet. After the stretching is complete, the fabric shall be tied to the top rails with ties securely clinched at the back of the rail. The fastenings shall be spaced not more than 24 inches on centers for the top rail.

(c) The fabric shall be attached to the line posts with ties securely clinched to the back of the line posts. The fastenings shall be spaced not more than 12 inches on centers for line posts. The topmost tie shall be placed on the line post as near the top of the fabric as possible and the lowest tie as near the bottom of the fabric as possible.

(d) At terminal (end, corner, and pull) and gate posts the fabric shall be fastened with stretcher bars and bands. The fastenings shall be spaced not more than 12 inches on centers for terminal (end, corner, and pull) and gate posts. The topmost band shall be placed on these posts as near the top of the fabric as possible and the lowest band as near the bottom of the fabric as possible.

Standard chain link fence stretching equipment shall be provided for stretching the fabric before tying it to the rails and posts. The stretching and tying operations shall be repeated about every 100 feet until the run of fence is completed. Equipment of one type for performing the stretching operation may be composed of four (4) pieces of lumber (2x4s or larger) cut into a slightly shorter length than the width of the fabric. The pieces shall be bored for six (6) bolts of about 1/2 inch or 5/8 inch diameter and shall be assembled as shown on the plans. One (1) pair shall be used for stretching the fabric, and both pairs shall be used for making a closure of a run of the fence.

Before making a closure, the other end of the run shall be fastened to the end, corner, or gate post as described previously. The operation of making a closure of a run shall be as follows: The stretching equipment as described above shall be clamped on the ends of the fabric parallel to each other and about 5 feet apart when the tension is first applied. The stretching shall continue until the slack has been removed from both sections of the fabric. If the ends overlap, the fabric shall be cut to match. The ends shall be joined by the insertion of a picket similar to the method of connecting two (2) rolls of fabric.

1208-3.7 INSTALLING GATES. The gates shall be hung on gate fittings as shown on the plans. The lower hinge (ball and socket type) shall be placed on top of the concrete footing in which the gate post is set; the concrete in the footing shall extend up to the bottom of the lower hinge. The sockets for the cane or foot bolts shall be set in concrete so that the plunger pin will fit perfectly in the socket when the gate is in a closed position. Gates shall be erected to swing in the direction indicated and shall be provided with gate stops as specified or as shown on the plans. All hardware shall be thoroughly secured, properly adjusted, and left in perfect working order. Hinges and diagonal bracing in gates shall be adjusted so that the gates will hang level. All gates shall be furnished with a closure which may be secured with a padlock.

1208-3.8 EXISTING FENCE CONNECTIONS. Wherever the new fence joins an existing fence, either at a corner or at the intersection of straight fence lines, a corner post with a brace post shall be set at the junction and braced the same as herein described for corner posts or as shown on the plans.

If the connection is made at other than the corner of the new fence, the last span of the old fence shall contain a brace span.

1208-4 MEASUREMENT AND PAYMENT

1208-4.1 thru 4.9 (SIZE) FOOT CHAIN LINK FENCE. Chain link fence shall be measured by the linear foot (LF) from outside to outside of corner, end, or gate post and shall be paid for at the unit price bid for "(Size) Foot Chain Link Fence" complete in place and accepted by the ENGINEER.

1208-4.10 thru 4.18 (SIZE) FOOT CHAIN LINK GATE. Chain Link Gates shall be measured on an individual unit basis (EA) and shall be paid for at the unit price bid for "(Size) Foot Chain Link Gate" complete in place and accepted by the ENGINEER.

SECTION 1209 – SANITARY SEWER AND WATER SERVICE CONNECTIONS

1209-1 DESCRIPTION

This item shall consist of furnishing and installing sanitary sewer and water service connections from the main lines located in public easements or rights-of-way, such as streets and alleys, to the right-of-way property line. The materials, equipment, and construction methods shall be in full compliance with the ordinances of the City of Bismarck, the North Dakota State Plumbing Code, regulations set forth by the North Dakota State Health Department, and in accordance with these specifications and standard details.

1209-2 MATERIALS

1209-2.1 POLYVINYL CHLORIDE SEWER PIPE. PVC Sewer Pipe and fittings shall conform to the requirements of ASTM D3034 for type PSM, PVC sewer pipe and fittings and shall have an SDR of 35 which shall be stamped on the pipe. Gasketed type joints on PVC pipe and fittings are preferred. Use of PVC sewer pipe joint cement must be approved by the ENGINEER prior to construction. The polyvinyl chloride sewer pipe joint cement shall consist of a viscous brushable solution of polyvinyl chloride in suitable active solvents. The cement shall be purchased from the pipe manufacturer and used in accordance with the manufacturer's instructions. It shall produce a joint of sufficient strength to permit normal installation handling within five (5) minutes after jointing when exercising reasonable care.

1209-2.2 JOINT MATERIALS. Joint Materials for sewer pipe shall conform to Subsections 801-2.4 thru 801-2.7.

1209-2.3 COPPER WATER PIPE. Copper Water Pipe shall conform to ASTM B88, Type K Soft. All new copper water service pipe shall be connected using a flared connection. New copper water service pipe being connected to existing copper water service pipe may be connected using a compression type connection if approved by the ENGINEER. All water service lines up to and including 2-inch shall be Type K Soft copper between the water main and curb stop.

1209-2.4 POLYETHYLENE WATER PIPE. Polyethylene water service line of iron pipe size (IPS) shall be manufactured from ultra-high molecular weight polyethylene (average molecular weight of 1,750,000) of virgin materials and shall meet the requirements of Type III Class "C" Category 5-P34 polyethylene as defined in ASTM D1248. The pipe shall be designated UHMWPE 3408, with a design stress of 630 pounds per square inch (630 psi) and a working pressure of 150 pounds per square inch (150 psi) for water at 73.4°F. The pipe shall conform to ASTM D2239 with a standard dimension ratio (SDR) of seven (7). The pipe shall be permanently imprinted with the manufacturer's brand name, pipe size, identification of the National Sanitation Foundation (NSF) approval, ASTM specification, recommended working pressure, and production date code. Connection fittings shall be compression fittings (gasket type), stab fitting with O-ring seal (Mueller Insta-Tite or an approved equal), or an insert type

fitting (Ford Pack Joint Coupling Series 66 or an approved equal for 1½-inch and 2-inch polyethylene only).

1209-2.5 CORPORATION STOP. Corporation stops shall be Mueller No. H-15000 or McDonald No. 4701 or Ford F600 or FB600 for copper water pipe or approved equal.

1209-2.6 CURB STOP. Curb Stops shall be the Mueller No. B-25154, Mueller No. H-15154, McDonald No. 6104, or a FORD B22, without drain, having a Minneapolis Pattern, or an approved equal. Curb stops shall be installed using the proper tools as recommended by the manufacturer.

1209-2.7 CURB BOX. Curb boxes shall be McDonald No. 5614 or Mueller No. H-10300 (1¼-inch diameter upper section) with 75-inch stationary rod installed with a stainless steel or brass pin to the curb stop, Mueller No. H-88703 or McDonald No. 5660, for 1¼-inch or smaller curb stops. Curb boxes shall be Mueller No. H-10304 or McDonald No. 5615 (2-inch diameter upper section) for 1½-inch or larger curb stops, or an approved equal. Stationary rods will not be required on curb stops 1½ inches or larger. The length of the curb box extended shall be 8 feet. Curb stops shall be installed on a ½ square foot by 4-inch thick concrete or brick pad. All curb boxes shall be encased with 8-mil linear low-density (LLD) polyethylene film in accordance with ANSI/AWWA C105/A21.5. All encasements shall be considered incidental.

1209-2.8 CONCRETE. Concrete for pipe cradles and saddles shall conform to the requirements of Section 501.

1209-2.9 TAPPING SLEEVE WITH TAPPING VALVE. For pipe sizes of 6 inches to 24 inches, the tapping sleeve shall be stainless steel with a stainless steel flange and bolts and shall conform to the “Smith Blair” Type 663 or “Romac” Type SST or an approved equal. For pipe sizes of 24 inches or larger, the tapping sleeve shall be epoxy lined and coated with stainless steel bolts and shall conform to the “Smith Blair” Type 622 Split Sleeve with O-Ring Seal. The tapping valve shall conform to City of Bismarck Standard Specification 901-2.8 for Gate Valves.

The City of Bismarck Public Works Department will tap the watermain at a charge to the CONTRACTOR. The CONTRACTOR shall be responsible for all other work connected with installation of the tapping sleeve and valve including the necessary space around the watermain required for the tapping machine and assisting the Public Works Department in positioning the tapping machine.

All corporation taps made into all sizes and classes of asbestos cement, PVC, sandcast iron, cast iron, and ductile iron, and prestressed concrete watermains shall be reinforced with a tapping saddle. Tapping saddles used on PVC watermain shall provide full support around the circumference of the pipe and provide a bearing area of sufficient width along the axis of the pipe 2 inches minimum, ensuring that the pipe will not be distorted when a saddle is tightened. Tapping saddles for PVC, ductile iron, cast iron, and sand cast iron watermain up to 12 inches in diameter shall be one of the following: Romac Style 306, PowerSeal Model 3412, Smith Blair Series 370, or an

approved equal. Tapping saddle for PVC, ductile iron, cast iron, and sand cast iron watermain over 12 inches in diameter shall be a Romac Style 305 or an approved equal. Tapping saddles for asbestos cement watermain shall be a double strap bronze with an O-ring gasket cemented in body groove as manufactured by the Mueller Company or an approved equal. Tapping saddles for prestressed concrete watermains shall be approved by the ENGINEER.

1209-3 CONSTRUCTION REQUIREMENTS

Construction requirements shall conform to Subsection 801-3 for sewer service connections and Subsection 901-3 for water service connections. All pipe and fittings shall be installed in accordance with the manufacturer's recommendations unless otherwise specified herein. All copper water service lines shall be constructed "snaked" within the trench.

For each sewer stubout a 2-inch by 2-inch wood marker shall be placed a minimum of 1 foot from the end of the sewer stubout, shall extend vertically and plumb to not less than 2 feet above the existing surrounding ground, and be painted green.

For each water stubout a 2-inch by 2-inch wood marker shall be placed a maximum of 1 foot from the curb stop box and extending vertically from a minimum of 3 feet below the top of the curb box to a minimum of 2 feet above the existing surrounding ground and be painted blue.

The CONTRACTOR shall be responsible for maintaining the markers until the project has been accepted by the ENGINEER. The cost of the stubout markers shall be considered incidental to other bid items.

When connecting to a sewer main and a wye is not available, the connection shall be made using an Inserta Tee manufactured by Inserta Fittings Co., or an approved equal. A factory-assembled wye may be cut in using gasketed repair couplers. When connecting to VC sewer main, Strong Back-RC Series repair couplers manufactured by Fernco, Inc., or an approved equal, may be used.

Bedding Material in accordance with Section 801-2.9 shall be placed in the trench, prior to laying any type of sewer pipe, 2 inches below bottom of pipe up to 6 inches or smaller, 4 inches when pipe used is 8 inches or larger. Bedding Material shall be installed to the centerline of the pipe and the full width of the excavating trench.

1209-4 MEASUREMENT AND PAYMENT

1209-4.1 thru 4.5 (SIZE) INCH SEWER SERVICE PIPE. Sewer Service Pipe shall conform to the specifications found in Section 1209-2.1. The sewer service pipe shall be measured by the linear foot (LF) from centerline of sewermain to plugged end of service connection and shall be paid for at the unit price bid for "(Size) Inch Sewer Service Pipe" complete in place and accepted by the ENGINEER.

1209-4.6 thru 1209-4.10 (SIZE) INCH SEWER PIPE BEND. The angle of the bend shall be compatible with the type of sewer service pipe and wye branch selected to provide a 90 degree angle between the sewer mainline and sewer service line. The sewer pipe bend shall be measured on an individual unit basis (EA) and paid for at the unit price bid for "(Size) Inch Sewer Pipe Bend" complete in place and accepted by the ENGINEER.

1209-4.11 thru 1209-4.20 (SIZE) INCH WATER SERVICE LINE. Water service lines shall conform to the specifications found in Section 1209-2.3 and Section 1209-2.4. The water service pipe shall be measured on a one-line basis by the linear foot (LF) from the centerline of the watermain at the water service connection to the end of the water service pipe and shall be paid for at the unit price bid for "(Size) Inch Water Service Line" complete in place and accepted by the ENGINEER.

1209-4.40 Thru 4.49 (SIZE) INCH WATER SERVICE CONNECTION. This connection shall include one tapping sleeve, one tap to the watermain, and one corporation stop. The connection shall be measured as a combined unit on an individual unit basis (EA) and paid for at the unit price bid for "(Size) Inch Water Service Connection" complete in place and accepted by the ENGINEER.

1209-4.50 thru 4.54 (SIZE) INCH CURB STOP AND (SIZE) INCH CURB BOX. The curb stop and curb box shall be measured as a combined unit on an individual unit basis (EA) and paid for at the unit price bid for "(Size) Inch Curb Stop and (Size) Inch Curb Box" complete in place and accepted by the ENGINEER.

1209-4.55 DISCONNECT WATER SERVICE LINE. Disconnecting a water service line shall consist of turning off the corporation stop at the main and disconnecting the pipe after the corporation stop. Disconnect Water Service Line shall be measured on an individual unit basis (EA) and paid for at the unit price bid for "Disconnect Water Service Line" complete in place, backfilled, and accepted by the ENGINEER.

SECTION 1210 – PAVEMENT MARKING

1210-1 DESCRIPTION

This work consists of furnishing and installing specified pavement markings at the designated locations.

1210-2 MATERIALS

1210-2.1 PAVEMENT MARKING PAINT

A. General.

1. **Quality.** All paint shall be formulated from first grade materials and shall be suitable in all respects for application at elevated spray temperatures with drop-on glass beads using conventional traffic striping equipment. The finished paint shall be smooth and homogeneous, free of coarse particles, skins, or any other foreign materials that are detrimental to its use or appearance.

2. **Manufacturing and Packaging of Preapproved Paint.** When preapproval of pavement marking paint is specified, the paint shall be manufactured in lot sizes no smaller than 1,000 gallons. The paint shall be screened with a 40 mesh or finer screen to remove any coarse particles, skins, or foreign materials. Paint shall be packaged in 55 gallon drums coated with a non-corrosive lining. The outside coating of drums shall be a pastel color. The storage temperature shall be kept at 32°F or higher.

3. **Package Stability of Preapproved Paint.** Within a period of 12 months from the time of delivery, the paint shall not cake, settle, liver, thicken, skin, curdle, gel, or show any other objectionable properties which cannot readily be corrected with minimal stirring. Any paint with properties that make it unsuitable for use within the specified 12 months shall be rejected and replaced with paint that meets the specifications. All costs incurred in replacing the paint shall be at the CONTRACTOR's expense.

B. Specific Requirements for Solvent-Based Traffic Marking Paint. Solvent-based pavement marking paint shall meet the general requirements of AASHTO M248-86: "Ready Mixed White and Yellow Traffic Paints" except for the following requirements:

AASHTO M248-86, Section 4.1.2, shall be revised as follows:

ASTM D476 Type I Anatase, or Type II Rutile shall be used.

AASHTO M248-86, Section 5.2.1, Extracted Pigment Requirements, shall be revised as follows:

The minimum purity requirements for the respective materials shall be as given in Sections 4.1.1 through 4.1.5.

Composition of Solvent-Based Paint
White Traffic Paint

Pigment Ingredients (% of Pigment)	**Type S**	**Type F**
Titanium Dioxide, Min. (Pure)	18.9	17.5
Calcium Carbonate	26.0-30.0	35.0-40.0
Magnesium Silicate	51.0-55.0	35.0-43.0
Zinc Oxide, Min.	—	3.0

Composition of Solvent Based Paint
Yellow Traffic Paint

Pigment Ingredients (% of Pigment)	**Type S**	**Type F**
Lead Chromate, Min. (Pure)	18.3	16.7
Calcium Carbonate	24.5-29.5	35.0-40.0
Magnesium Silicate	52.0-57.0	35.0-43.0

AASHTO M248-86, Section 5.3, shall be revised as follows:

Composition of Non-Volatile Vehicle
White and Yellow Traffic Paint

Vehicle Ingredients (% by Wt. of Vehicle)	**Type S**	**Hypalon* Chlorinated Polyolefin Type F**	**Acrylic Copolymer Type F**	**Chlorinated Rubber Type F**
Alkyd Resin Solids (±0.5%)	100	41.14	41.14	37.6
Acrylic Copolymer BR-201 (±0.5%)	—	—	47.25	—
Chlorinated Rubber (±0.5%)	—	—	—	37.0
Chlorinated Paraffin (±0.5%)	—	11.61	11.61	25.4
Chlorinated Polyolefin, (CP-173) (±0.5%)	—	47.25	—	—

*Solvent is 100% MEK except for Alkyd Resin solution.

AASHTO M248-86, Section 5.4, shall be revised as follows:

Quantitative Requirements of White Solvent-Based Paint

Characteristics	Type S	Type F
Titanium Dioxide (as % of Extr. Pigment) (min) (Pure)	18.9	17.5
Pigment (%)	49.0 –51.0	49.0 –51.0
Total Solids (%) (min)	68.5	69.0
Vehicle Solids (%) (min)	37.0	38.0
Weight per Gallon (lbs) (min)	10.6	11.1
Viscosity (K.U.)	70-80	70-85
Fineness of Grind (Hegman) (min)	2.0	2.0
Drying Time (Minutes) (max)	20.0	10.0
Directional Reflectance, (%) (min)	80	80
Uncombined Water (%) (max)	1.0	1.0
Particles and Skins Retained on 325 Mesh Sieve (%) (max)	1.0	1.0

Quantitative Requirements of Yellow Paint

Characteristics	Type S	Type F
Lead Chromate (as % of Extr. Pigment) (min) (Pure)	18.3	16.7
Pigment (%)	50.0-52.0	50.0-52.0
Total Solids (%) (min)	69.2	69.5
Vehicle Solids (%) (min)	37.0	38.0
Weight per Gallon (lbs) (min)	10.8	11.3
Viscosity (K.U.)	70-80	70-85
Fineness of Grind (Hegman) (min)	2.0	2.0
Drying Time (Minutes) (max)	20.0	10.0
Color (to pass Fed. Std.) (Chip #33538)		
Directional Reflectance, (%) (min)	50	50
Uncombined Water (%) (max)	1.0	1.0
Particles and Skins Retained on 325 Mesh Sieve (%) (max)	1.0	1.0

C. Specific Requirements for Water-Based Traffic Marking Paint. The exact composition of the water-based traffic paint shall be left to the manufacturer, provided the finished paint meets the following:

Quantitative Requirements of Water-Based Paint

Characteristics	White	Yellow
Pigment (%)	58 –62	57 –61
Titanium Dioxide, (%) (min), Pure Ti02 as % of pigment (Rutile II)	12.20	2.50
Acrylic Emulsion Vehicle Resin solids (%) (min)	43.0	43.0
Total Solids (%) (min)	76.1	75.1
Weight per Gallon (lbs) (min)	13.0	12.7
Fineness of Grind (Hegman) (min)	3.0	3.0
Viscosity (K.U. @ 77°)	80-100	80-100
pH (min)	9.6	9.6
Color (Fed. Std. Chip #33538) CIE Chromaticity Limits		x = 0.470-0.530 y = 0.429-0.483
Drying Time (Minutes) max) (ASTM D711) 12 mil wet thickness @ 77°F:		
@65%R.H.	12.0	12.0
@90%R.H.	75.0	75.0
Contrast Ratio @ 12 mils wet (%) (min)	98.0	96.0
Directional Reflectance, Daylight (%) (min)	83	50
Volatile Organic Content, (lb/gal) (max)	1.25	1.25

The vehicle resin solids shall be composed of a 100% acrylic polymer such as Rohm and Haas E-706, or equivalent.

The yellow paint shall have non-toxic organic yellow pigmentation. The prime organic pigment in the yellow paint shall be color index pigment yellow number 65 or number 75.

The white and organic pigmented yellow paints shall be free of toxic heavy metals.

When applied with glass beads at pavement temperatures above 50°F and at relative humidities of up to 75%, the paint shall dry to a no-track condition within 3 minutes.

D. Sampling, Testing, and Accepting. When preapproval of pavement marking paint, solvent-or water-based, is specified, the CONTRACTOR shall obtain two, 1-pint samples of paint from each lot after the paint has been shipped to some point within the state. Epoxy lined cans shall be used for sampling water-based paint.

CITY personnel are to be notified and shall be present when each sample is obtained. The CITY personnel will submit the samples for testing. The samples shall be submitted 30 days before the scheduled use of the marking paint. If the paint sample meets specifications, the lot being represented by the sample will be accepted. If a paint sample fails to meet specifications, the lot being represented by the sample will be rejected and replaced with paint that meets specifications. All costs incurred in replacing nonspecification paint shall be at the CONTRACTOR's expense.

If preapproval of the marking paint, solvent- or water-based, is not specified, the CITY will take random samples of the marking paint. If the paint samples meet specifications, the lot being represented by the sample will be accepted. If the paint does not meet the specifications and the paint has not been applied to the road, the paint will be rejected and replaced with paint that meets specifications. If the paint sample does not meet specifications and the paint has been applied to the road, and the work is found unacceptable, the lot being represented by the sample will be rejected and replaced with paint that meets specifications. All costs incurred in replacing nonspecification paint shall be at the CONTRACTOR's expense. If the ENGINEER accepts the paint which does not meet specifications, payment for the lot being represented by the sample will be made at the following adjusted price:

1. Quantitative Requirements for Paint.

a. Pigment (Solvent-Based and Water-Based Paints).

Deviation in Units ±	**Price Adjustment %**
0 to 1.0	0
1.0(+) to 2.0	10
2.0(+) to 3.0	15
3.0(+) to 4.0	20
Over 4.0	25

b. Viscosity (Solvent-Based and Water-Based Paints).

Deviation in Krebs Units ±	**Price Adjustment %**
0 to 2	0
2(+) to 4	5
4(+) to 6	10
6(+) to 8	15
Over 8	25

c. Total Solids (Vehicle Solids for Solvent-Based and Acrylic Emulsion Vehicle Solids for Water-Based Paints).

Deviation in Units	Price Adjustment %
0 to 1.0	0
1.0(+) to 2.0	10
2.0(+) to 3.0	15
3.0(+) to 4.0	20
Over 4.0	25

d . Drying Time Requirement.

(1) Solvent-Based Paint, and Water-Based Paint at 65% Relative Humidity.

Deviation in Minutes	Price Adjustment %
0 to 2	0
2(+) to 4	5
4(+) to 7	10
7(+) to 10	15
Over 10	25

(2) Water-Based Paint at 90% Relative Humidity.

Deviation in Minutes	Price Adjustment %
0 to 15	0
15(+) to 45	10
Over 45	25

2. Quantitative Requirements for Pigment.*

a. White Traffic Paint – Titanium Dioxide (Solvent-Based and Water-Based Paint).

Deviation in Units	Price Adjustment %
0 to 1.0	0
1.0(+) to 2.0	10
2.0(+) to 3.0	15
3.0(+) to 4.0	20
Over 4.0	25

b. Yellow Traffic Paint – Lead Chromate (Solvent-Based Paint).

Deviation in Units	Price Adjustment %
0 to 1.0	0
1.0(+) to 2.0	10
2.0(+) to 3.0	15
3.0(+) to 4.0	20
Over 4.0	25

*If the percent of Titanium Dioxide and Lead Chromate is greater than the specification limits, no deduct will be applied for pigment content. The deduct for pigment content will only be applied if test results are less than the specification range.

c. Yellow Traffic Paint – CIE Chromaticity Limits for X and Y (Water-Based Paint).

Deviation in Percent from X and Y Centroids	Price Adjustment %
0 to 6.0	0
6.0(+) to 7.0	5
7.0(+) to 8.0	10
10.0(+) 12.0	20
Over 12.0	25

3. Calculation of Price Adjustment.

Price Adjustment = [Gallons of Paint*] x [Price/Gal.**] x [Price Adj. %]

* Gallons of paint used on the project represented by the failing test.
** Invoice price per gallon of paint.

1210-2.2 GLASS BEADS

A. Specific Requirement.

1. Glass Beads for Solvent-Based Paint.

a. Physical Properties. Glass beads for solvent-based pavement marking paint shall meet AASHTO M247, Type I. The flotation properties of AASHTO M247 shall be modified to allow a maximum of 20% of the beads, by weight, to float when tested according to Section 4.5.

b. Sampling and Testing. The sampling and testing shall be according to AASHTO M247.

2. Glass Beads for Water-Based Paint.

a. Physical Properties. Glass beads for pavement marking shall meet AASHTO M247, Type I, “standard gradation,” except the beads shall have a minimum of 80% true spheres. The beads shall be made from clean colorless transparent glass and shall be smooth, spherically shaped, and free from milkiness, pits, excessive air bubbles, chips, and foreign material. The beads shall have a dual surface treatment consisting of a moisture resistant silicone treatment and a silane adherence surface treatment. The dual treated beads shall pass the NDDOT method of testing glass beads for moisture resistance (Spoon Test), and shall pass the NDDOT method of testing glass beads for adherence coating (Dansyl Chloride Test).

b. Sampling and Testing. The sampling and testing shall be according to the NDDOT's sampling and testing methods.

B. Packaging and Marking. The beads shall be furnished in moisture-proof containers or moisture-proof bags. Each container or bag shall be marked with name of contents, manufacturer, net weight, lot number, and ton number.

C. Certification. The manufacturer shall furnish one copy of a certificate for each lot of the material furnished, giving the properties of the beads and certifying that they meet the required specifications. The affidavit shall show designation of the sample, lot number, and date of manufacture.

1210-2.3 PLASTIC PAVEMENT MARKING FILM (RETROREFLECTIVE)

A. General. The prefabricated plastic pavement markings shall consist of white or yellow pigmented plastic films, conforming to standard highway colors, with reflective glass spheres incorporated throughout the entire cross-sectional area and a layer of reflective glass spheres bonded to the top surface. The pavement markings shall adhere to bituminous or Portland Cement Concrete pavements by either a pressure-sensitive precoated adhesive or a liquid contact cement. The markings shall be provided in a form that facilitates rapid application and protects the markings in shipment and storage. The manufacturer shall identify proper solvents and adhesives to be applied at the time of application, all equipment necessary for proper application, and recommendations for application that assures an effective performance life. The marking material shall mold itself to pavement contours by the action of traffic. The pavement marking films shall also be capable of application on new bituminous concrete wearing courses during the paving operation according to the manufacturer's instructions. After application, the markings shall be immediately ready for traffic.

Prefabricated legend and symbols shall meet the applicable shapes and sizes shown in the Contract.

B. Retroreflective Pliant Polymer. The pavement marking film shall consist of a mixture of high quality polymeric material, pigments,1.5 index glass beads uniformly distributed throughout its cross-sectional area, and a reflective layer of beads bonded to the top surface. These materials shall be as follows:

Materials	Minimum Percent by Weight
Resins & Plasticizers	20
Pigments	30
Graded Glass Beads	33

The remaining 17% shall be comprised of the above materials in various proportions.

These materials shall be fabricated into pavement marking film of specified thickness and dimensions.

C. Requirements.

1. **Skid Resistance.** The surface of the marking film shall provide a minimum skid resistance value of 45 BPN when tested according to ASTM E303.

2. **Reflectance.** The white and yellow films shall have the initial minimum values specified in the following table when measured according to ASTM D4061. The photometric quantity to be measured shall be specific luminance (SL), and shall be expressed as millicandelas per square foot per foot-candle [(mcd/ft^2)/fc]. The metric equivalent shall be expressed as millicandelas per square meter per lux. The sample size shall be a 2-foot by 2.5-foot rectangle.

	White		**Yellow**	
Observation Angle	0.2°	0.5°	0.2°	0.5°
SL [(mcd/ft 2)/fc]	550	380	410	250

3. **Tensile Strength and Elongation.** The film shall have a minimum tensile strength of 150 psi of cross section when tested according to ASTM D638. A sample 6 inches by 1 inch shall be tested at a temperature between 70°F and 80°F using a jaw speed of 12 inches per minute. The film shall have a minimum elongation of 75% at break.

4. **Patchability.** The pavement marking film shall be capable of use for patching worn areas of the same type of film according to the manufacturer's instructions.

5. **Pigmentation.** The film, white or yellow, shall meet standard highway colors.

6. **Acid Resistance.** The beads shall show resistance to corrosion of their surface after exposure to a 1% solution (by weight) of sulfuric acid. The 1% acid solution shall be made by adding 5.7 cc of concentrated acid into 1,000 cc of distilled water. Always add the concentrated acid into the water, not the reverse. The test shall be performed as follows:

   A 1-inch by 2-inch sample shall be adhered to the bottom of a glass tray and just enough acid solution shall be placed over the sample to completely immerse it. The tray shall be covered with a piece of glass to prevent evaporation and the sample shall remain under those conditions for 24 hours. The acid solution shall be decanted and the sample, while adhering to the glass tray, shall be dried in a 150°F oven for approximately 15 minutes.

   Microscopic examination with 20 power shall show no more than 15% of the beads having a formation of a very distinct opaque white (corroded) layer on their entire surface.

7. **Reflective Retention.** To have effective performance life, the glass beads shall be strongly bonded. One of the following tests shall be employed to measure reflective retention:

   a. **Taber Abrader Simulation Test.** Using a taber abrader with an H-18 wheel and a 125 gram load, the sample shall be inspected at 200 cycles under a microscope and no more than 15% of the beads shall be lost due to popouts.

   b. **Qualitative Tests.** Bead bond strengths shall be judged under a microscope with a magnification of at least 5-power. The beads shall be difficult to remove and bead removal shall remove a portion of the polymeric bead bond with the bead rather than popping out clean from their sockets.

8. **Thickness.** The film, without adhesive, shall be supplied in a standard thickness of 0.06 inch.

9. **Effective Performance Life.** The film, when applied according to the manufacturer, shall provide a neat, durable marking that will not flow or distort due to temperature. Although reflectivity is reduced by wear, the film shall provide a cushioned resilient substrate that reduces bead crushing and loss. The film shall be weather resistant and through normal traffic wear, shall not fade, lift, or shrink throughout the life of the marking and shall show no significant tearing, roll back, or other signs of poor adhesion.

1210-2.4 DURABLE PREFORMED PAVEMENT MARKINGS

A. General. The pavement marking material shall consist of white or yellow Retroreflective pliant polymer materials designed for longitudinal and word/symbol markings subjected to high traffic volumes and severe wear conditions meeting the following:

The markings shall be manufactured and packaged to permit storage at manufacturer's recommended shelf temperature for a period of not less than one year from the date of purchase.

Prefabricated legends and symbols shall meet the shapes and sizes as shown on the Standard Drawings.

The CONTRACTOR shall secure from the manufacturer all warranties and guarantees with respect to materials, parts, workmanship, or performance which the products covered by the proposal bear, and include these warranties and guarantees with the certification.

B. Composition. Durable preformed pavement markings shall consist of a mixture of high-quality polymeric materials, pigments, and glass beads distributed throughout its base cross-sectional area, with a reflective layer of beads embedded into the patterned surface.

The preformed markings shall adhere to asphalt concrete or Portland Cement concrete by a precoated pressure sensitive adhesive. A primer may be used to precondition the pavement surface. The preformed markings shall conform to pavement contours by the action of traffic. The pavement markings shall be capable of application on new, dense, and open graded asphalt concrete wearing courses during the paving operation according to the manufacturer's instructions. After application, the markings shall be immediately ready for traffic.

C. Skid Resistance. The surface of the durable preformed markings shall provide an initial minimum skid resistance value of 45 BPN when tested according to ASTM E303.

D. Thickness. The material without adhesive shall have a minimum caliper of 0.06 inch at the thickest portion of the cross section and a minimum caliper of 0.02 inch at the thinnest portion of the cross section.

E. Beads.

1. **Index of Refraction.** The glass beads on the surface of the material shall have a minimum index of refraction of 1.70 when tested using the liquid oil immersion method. The glass beads mixed into the pliant polymer shall have a minimum index of refraction of 1.5 when tested by the oil immersion method. The size and quality of the beads shall be such that the performance requirements for the durable preformed markings shall be met.

2. **Bead Adhesion.** Adhesion shall be such that beads are not easily removed when the film surface is scratched firmly with a thumbnail.

3. **Acid Resistance.** The beads shall show resistance to corrosion of their surface after exposure to a 1% solution (by weight) of sulfuric acid. The 1% acid solution shall be made by adding 5.7 cc of concentrated acid into 1,000 cc of distilled water. Always add the concentrated acid into the water, not the reverse. The test shall be performed as follows:

   A 1-inch by 2-inch sample shall be adhered to the bottom of a glass tray and just enough acid solution shall be placed over the sample to completely immerse it. The tray shall be covered with a piece of glass to prevent evaporation and the sample shall remain under those conditions for 24 hours. The acid solution shall be decanted and the sample, while adhering to the glass tray, shall be dried in a 150°F oven for approximately 15 minutes.

   Microscopic examination with 20 power shall show no more than 15% of the beads having a formation of a very distinct opaque white (corroded) layer on their entire surface.

F. Patchability. The pavement marking material shall be capable of use for patching worn areas of the same type according to manufacturer's instructions.

G. Reflectance. The CONTRACTOR shall furnish written assurance that a 2-foot by 2.5-foot sample tested according to ASTM D4061 meets the following minimum requirements throughout the satisfactory performance life:

	White	**Yellow**
Entrance Angle	86.5°	86.5°
Observation Angle	1°	1°
SL(mcd/ft^2)/fc)	100*	100*

*All reflectance measurements shall be made using an "Ecolux" brand retroreflectometer or equivalent.

Satisfactory Performance Life

Longitudinal Marking	**Word/Symbol**
4 years	2 years

1210-2.5 PREFORMED PLASTIC MARKING FILM

A. General. The pavement marking material shall consist of white or yellow weather-resistant reflective film meeting the following requirements:

The markings shall be manufactured and packaged to permit storage at the manufacturer's recommended shelf temperature for a period of not less than one year from the date of purchase.

Prefabricated legends and symbols shall meet the shapes and sizes as shown on the Standard Drawings.

B. Composition. The preformed plastic markings shall consist of high-quality plastic material, pigments, and 1.5 index glass beads uniformly distributed throughout its cross-sectional area and with a reflective layer of beads embedded or bonded in the top surface. The film shall be furnished with the appropriate adhesive system recommended by the manufacturer.

C. Skid Resistance. The surface of the preformed plastic marking film shall provide a minimum skid resistance value of 35 BPN when tested according to ASTM E303.

D. Color. The striping material shall be white or yellow in color meeting standard highway colors.

E. Thickness. The thickness of the preformed plastic marking film without adhesive shall be 60 mils.

F. Durability and Wear Resistance. The preformed plastic marking film, when properly applied, shall provide a neat, durable marking. The preformed plastic marking film shall provide a cushioned resilient surface substrate that reduces bead crush and loss. The film shall be weather resistant and through normal traffic wear shall not fade, lift, or shrink throughout the life of the marking, and show no significant tearing, roll back, or other signs of poor adhesion.

G. Tensile Strength. The film shall have a minimum tensile strength of 40 psi of cross section when tested according to ASTM D638.

H. Conformability and Resealing. The preformed film shall conform to pavement contours, breaks, faults, etc., through the action of traffic at normal pavement temperatures. The film shall have resealing characteristics that will fuse with itself and previously-applied marking film of the same composition under normal conditions of use.

I. Elongation. The film shall have a maximum elongation of 100% when tested according to ASTM D638.

J. Plastic Pull Test. A test specimen 1 inch by 3 inches shall support a dead weight of 5 pounds for not less than 5 minutes at a temperature between 70° and 80°F.

1210-2.6 PREFORMED PATTERNED PAVEMENT MARKING FILM

A. General. The preformed patterned markings shall consist of white or yellow films with ceramic beads incorporated to provide immediate and continuing retroreflection and shall meet the following requirements:

The markings shall be manufactured and packaged to permit storage at manufacturer's recommended shelf temperature for a period of not less than one year from the date of purchase.

Legends and symbols shall confirm to the shapes and sizes as shown on the NDDOT Standard Drawings.

The CONTRACTOR shall secure from the manufacturer all warranties and guarantees with respect to materials, workmanship, or performance which the products covered by the proposal bear, and include these warranties and guarantees with the certification.

B. Composition. The retroreflective pliant polymer pavement markings shall consist of a mixture of high-quality polymeric materials, pigments, and glass beads distributed throughout its base cross-sectional area, with a reflective layer of ceramic beads bonded to a durable polyurethane topcoat surface. The patterned surface shall have approximately 50% + or - 15% of the surface area raised and presenting a near

vertical face to traffic from any direction. The channels between the raised areas shall be substantially free of exposed beads or particles.

The preformed markings shall conform to pavement contours by the action of traffic. The pavement markings shall be capable of application on new, dense, and open graded asphalt wearing courses during the paving operation according to the manufacturer's instructions. After application, the marking shall be immediately ready for traffic.

C. Skid Resistance. The surface of the tape shall provide an initial minimum skid resistance value of 45 BPN when tested according to ASTM E303 except values shall be taken at downweb and at a 45 degree angle from downweb. These two values will then be averaged to find the skid resistance of the patterned surface.

D. Thickness. The patterned material without adhesive shall have a minimum caliper of 0.065 inches at the thickest portion of the patterned cross section and minimum caliper of 0.02 inches at the thinnest portion of the cross section.

E. Beads. The glass beads on the surface of the material shall have a minimum index of refraction of 1.7 when tested using the liquid oil immersion method. The glass beads mixed into the pliant polymer shall have a minimum index of 1.5 when tested by the oil immersion method.

F. Patchability. The pavement marking material shall be capable of use for patching worn areas of the same type according to the manufacturer's instructions.

G. Reflectance. The white and yellow markings shall have the following initial expected retroreflectance values as measured according to the testing procedures of ASTM D4061. The photometric quantity to be measured shall be specific luminance (SL), and shall be expressed as millicandelas per square foot per footcandle. The test distance shall be 50 feet and the sample size shall be a 2.0-foot by 2.5-foot rectangle.

	White	**Yellow**
Entrance Angle	86.5°	86.5°
Observation Angle	1°	1°
SL	700*	500*

*All reflectance measurements shall be made using an "Ecolux" brand retroreflectometer or equivalent.

1210-2.7 REFLECTIVE PRESSURE-SENSITIVE PAVEMENT MARKING SHEETING

A. General. The striping material shall be of good appearance, free from cracks, and edges shall be true, straight, and unbroken. The material shall be supplied in rolls and there shall be no more than 3 splices per 50 yards of length. The striping material may be stored at temperatures up to 100°F for a period of one year. The striping material shall be of white or yellow color meeting standard highway colors.

B. Reflectance. The white and yellow films shall have the initial minimum values specified in the following table when measured according to ASTM D4061. The photometric quantity to be measured shall be specific luminance (SL), and shall be expressed as millicandelas per square foot per foot-candle [(mcd/ft^2)/fc]. The metric equivalent shall be expressed as millicandelas per square meter per lux. The sample size shall be a 2-foot by 2.5-foot rectangle.

	White		**Yellow**	
Observation Angle	0.2°	0.5°	0.2°	0.5°
SL [(mcd/ft^2)/fc]	2,730	1,780	1,900	1,270

C. Adhesive. The striping material shall have a precoated pressure-sensitive adhesive which shall not require a liner nor require activation procedures.

Material applied and tested according to ASTM D1000 shall show minimum adhesion values as follows:

Application Temp.	**Test Temp.**	**Minimum Adhesion Value GMS/Inch in Width**
35°F	0°F	500
75°F	75°F	500
115°F	115°F	1,000

D. Conformability. The striping material shall be thin, flexible, formable, and following application, shall remain conformed to the texture of the pavement surface. The average thickness of the material, as determined by 5 micrometer readings, shall not be less than 25 mils nor more than 40 mils.

E. Durability and Wear Resistance. The striping material applied using the manufacturer's procedures shall be weather resistant and shall not fade, lift, or shrink during the life of the stripe. Samples of material applied to specimen plates and tested according to Federal Test Method Standard No. 141, Method 6192, using a CS-17 wheel and 1,000 gram load, shall not wear through to the metallic surface after 5,000 cycles.

1210-2.8 SHORT-TERM STRIPE

Pavement marking paint for short-term striping shall be commercially-available traffic marking paint, and shall be yellow or white in color. The mixed paint shall show no signs of thickening, caking, livering, or curdling, and shall be free of water, skins, and any other foreign materials. At the time of application, the mixed paint shall be capable of being easily stirred with a paddle to a smooth, uniform consistency. The paint shall dry to an elastic, adherent finish that will not discolor in sunlight.

Glass beads for short-term stripes shall meet Section 1210-2.

Pavement marking tape for short-term stripe shall be 4 inches wide with a pressure-sensitive adhesive backing and have reflectorizing glass beads embedded in the surface. The tape shall be durable and function effectively for the required period of service and adhere to the pavement surface.

1210-2.9 CONSTRUCTION ZONE MARKING

The wet retroreflective system shall consist of white or yellow retroreflective tape on a conformable backing with deformable highly retroreflective markers adhered transversely to the top surface with a pressure-sensitive adhesive. The tape and the wet retroreflective marker sheeting element, white or yellow, shall meet standard highway colors. Wet retroreflective markers will only be required when specified.

The size, quality, and refractive index of the glass beads shall be such that the performance requirements for the marking shall be met. The bead adhesion shall be such that beads are not easily removed when the material surface is scratched with a thumbnail.

The preformed tape shall be precoated with a pressure-sensitive adhesive and shall adhere to asphalt concrete or Portland Cement concrete, according to manufacturer's instructions, without the use of heat, solvents, or other additional adhesive means, and shall be immediately ready for traffic after application.

The wet retroreflective markers shall be precoated with a pressure-sensitive adhesive that adheres to the retroreflective top film of the preformed tape. The retroreflective sheeting element of the wet retroreflective marker shall consist of a retroreflective lens system having a smooth outer surface.

Preformed words and symbols shall meet the applicable shapes and sizes as shown on the Plans.

Preformed marking for construction zones shall be either Type R – Removable Retroreflective Film, or Type NR – Retroreflective Pavement Striping Tape (not easily removed). The Plans will specify which type to use. Requirements for each type are as follows:

A. Type R – Removable Retroreflective Films.

1. **Composition.** The removable preformed pavement marking shall not contain metallic foil and shall consist of a mixture of high-quality polymeric materials and pigments, with glass beads throughout the pigmented portion of the film, and a reflective layer of beads bonded to the top surface. The film shall be precoated with a pressure-sensitive adhesive. A nonmetallic medium shall be incorporated to facilitate removal.

2. **Reflectance.** The white and yellow films shall have the initial minimum values specified in the following table at 86° entrance angle when measured according

to ASTM D4061. The photometric quantity to be measured shall be specific luminance (SL) and shall be expressed as millicandelas per square foot per foot candle [(mcd/ft^2)/fc]. The test distance shall be 50 feet, and the sample size shall be a 2.0-foot by 2.5-foot rectangle. The angular aperture of both the photoreceptor and light projector shall be 6 minutes of arc.

The reference center shall be the geometric center of the sample, and the reference axis shall be taken perpendicular to the test sample.

	White		**Yellow**	
Observation Angle	0.2	0.5°	0.2	0.5°
SL [(mcd/ft^2)/fc]	1,770	1,270	1,310	820

3. **Adhesion.** The manufacturer shall demonstrate that the properly-applied pavement marking adheres to the roadway pavement under climatic and traffic conditions normally encountered in construction work in the geographic area where it is proposed for use.

4. **Removability.** The marking film shall be removable from asphalt and Portland Cement concrete, intact or in large pieces, either manually or with a roll-up device, at temperatures above 40°F without the use of heat, solvents, grinding, or blasting.

5. **Skid Resistance.** The surface of the marking shall provide an initial minimum skid resistance value of 50 BPN when tested according to ASTM E303.

B. Type NR – Retroreflective Pavement Striping Tape.

1. **Composition.** The pavement striping tape shall consist of a white or yellow retroreflective film on a conformable metallic backing, precoated with a pressure-sensitive adhesive.

2. **Reflectance.** The white and yellow films shall have the initial minimum values specified in the following table at 86° entrance angle when measured according to ASTM D4061. The photometric quantity to be measured shall be specific luminance (SL) and shall be expressed as millicandelas per square foot per foot candle [(mcd/ft^2)/fc]. The test distance shall be 50 feet, and the sample size shall be a 2.0-foot by 2.5-foot rectangle. The angular aperture of both the photoreceptor and light projector shall be 6 minutes of arc. The reference center shall be the geometric center of the sample, and the reference axis shall be taken perpendicular to the test sample.

	White		**Yellow**	
Observation Angle	0.2	0.5°	0.2	0.5°
SL [(mcd/ft^2)/fc]	1,360	760	820	510

3. **Skid Resistance.** The surface of the marking shall provide an initial minimum skid resistance value of 35 BPN when tested according to ASTM E303.

4. **Abrasion Resistance.** Samples of the test material shall not wear through to the conformable backing surface in less than 125 cycles, when tested according to Federal Test Method Standards 141, Method 6192, modified by using an H-22 wheel and a 250 gram load.

5. **Adhesion.** The manufacturer shall demonstrate that the properly-applied pavement marking adheres to the roadway pavement under climatic and traffic conditions normally encountered in construction work where proposed for use.

C. Wet Reflective Markers.

1. **Composition.** The marker body shall be an expanded rubber extrusion that is elastically compressed and deflected when impacted by rotating vehicle tires. When tested per ASTM D1056 for expanded rubber, the marker body shall have the following typical properties:

   a. Compression deflection less than 16 psi at 25° deflection.

   b. Oven aged compression deflection (% change) +18.

   c. Compress set low 10%.

   d. Water absorption, less than 9%.

   e. Density 24 lbs./ft. The marker shall have a precoated pressure-sensitive adhesive capable of adhering to the retroreflective top film of the performance tape.

   The marker shall have a retroreflective enclosed lens sheeting element adhered to the marker body with a pressure-sensitive adhesive.

2. **Reflectance.** The white and yellow foam markers shall have the initial minimum reflectance values shown in the following table when measured according to ASTM E809. The photometric quantity to be measured shall be coefficient of luminous intensity (R) and shall be expressed as candelas per foot candle (cd/fc). The entrance angle Beta One = 0 (Vertical). The entrance angle, in the table below, is the entrance component, Beta Two, at -4° (Horizontal) as described in ASTM E808.

	Observation Angle			
Color	**0.2°**	**0.5°**	**1.0°**	**1.5°**
White	1.0	0.4	.19	.14
Yellow	0.6	.24	.11	.08

For testing purposes, the retroreflective reference axis used to define the entrance angle in the Specification is considered to be the axis emanating from the center of the reflective surface of the marker and directed parallel to the base and perpendicular to the top edge of the marker when viewed from above.

The angle formed by the reflective surface and the base of the marker must be between 75° and 90° before measurement.

Reflective elements of the marker shall be visible to motorists in low beam headlamps at night at the following distances and conditions:

1,500 feet - dry
1,000 feet - at a rate of 1” of rainfall per hour
250 feet - at a rate of 8” of rainfall per hour

1210-2.10 RAISED PAVEMENT MARKERS

Raised pavement markers shall consist of a plastic shell with one or more prismatic reflective faces with a minimum of 2.45 square centimeters of reflective surface for each direction required to reflect incident light. The marker shall be fitted with pressure-sensitive adhesive for application to a primed surface.

The materials used shall be capable of being easily applied and removed. The CONTRACTOR shall demonstrate that the properly-applied pavement marking adheres to the roadway under climatic and traffic conditions normally encountered in the construction work zone.

*Either “slow,” “medium,” or “fast dry” paint and either type of Plastic Marking Film may be used.

1210-3 EQUIPMENT

Paint Applicator. The equipment required to apply pavement marking paint and glass beads shall be a self-propelled, pneumatic spraying machine with atomizing nozzles capable of applying two 4-inch to 8-inch wide lines at one time. The spray mechanism shall be operated by quick opening and closing valves. The applicator shall apply the materials at a rate specified in an even and uniform thickness with clearly defined edges. The applicator shall have reservoirs or tanks equipped with agitators that keep the material in a smooth, even mixture. Tanks shall have sufficient capacity to apply the materials as specified. The applicator shall be equipped with an automatic skip control device that applies a stripe of specified length with a linear tolerance of 3 inches. The applicator shall be equipped with a guide boom and be capable of retracing and applying materials to traffic markings in place.

Adequate hand-operated equipment shall be required to place the pavement markings on areas not readily accessible to the pavement marking applicator.

The machine shall be equipped with a glass bead dispenser adjusted and synchronized with the paint applicator to distribute the reflectorizing spheres uniformly on the painted line(s) using air pressure. The bead dispenser shall be equipped with an automatic cutoff control, synchronized with the cutoff of the striping material.

1210-4 CONSTRUCTION REQUIREMENTS

A. General. A project layout of the pavement striping and marking shall be prepared and submitted to the ENGINEER for approval 48 hours before any installation work. Type F paint shall be used for all painted centerline pavement marking, other than short-term pavement marking.

B. Pavement Surface Preparation.

1. **General.** The pavement surface in the area where markings are to be applied shall be clean and dry. Foreign materials (i.e., dirt, petroleum products, paint, and curing compound) shall be removed from the pavement surface before applying pavement marking. The amount of pavement moisture shall be tested by taping a 12-inch by 12-inch (approximate) sheet of transparent plastic film, similar to “Saran Wrap,” to the pavement. If moisture condenses on the pavement side of the film within 15 minutes, the pavement must be dried before installing pavement markings. The moisture test will not be required when water-based pavement marking paint is used.

2. **Plastic Pavement Marking Film.** The pavement surface shall be cleaned by sandblasting, power water spray, grinding, wire brushing, brooming, compressed air, or other methods to the satisfaction of the ENGINEER. New Portland Cement concrete that has curing compound on it shall be sandblasted. Costs associated with the required cleaning shall be an incidental item to payment for the plastic pavement marking film. If short-term or permanent pavement marking is encountered, removal will be paid for at the Contract Unit Price bid for Obliteration of Pavement Marking. When no bid item is provided, the cost of removing the pavement marking will be paid for as incidental.

3. **Preformed Patterned Pavement Marking Film.** The preformed marking shall be capable of being adhered to asphalt concrete by a pre-coated pressure sensitive adhesive. A primer may be used to precondition the pavement surface.

4. **Pavement Marking Paint.** If the ENGINEER requires a cleaning method other than air pressure, the cost of cleaning will be paid for as incidental.

5. **Short-Term Pavement Marking.** Short-term pavement marking shall be an application of pavement marking paint, pavement marking tape, or raised pavement markers. The surface preparation for application of the short-term pavement marking shall be the same as that required for permanent striping.

C. Traffic Control.

1. **Signing.** The CONTRACTOR shall erect and maintain sufficient devices (cones, signs, barricades) to protect the work area from traffic interference, tracking on or damage to the cleaned pavement, and the newly applied markings. All devices used to divert traffic from the work zone shall be designed to resist displacement by wind.

2. **Traffic Movement.** Traffic shall be maintained through the work area at all times according to the traffic control plan and Section 1211. Flagpersons and shadow vehicles shall be furnished when required. Two-way traffic shall be maintained on two-lane roadways, and 1/2 the roadway shall be open to traffic on multi-laned roadways at all times. Costs of furnishing, erecting, and maintaining cones, signs, and barricades, including the costs of flagging and shadow vehicles, shall be incidental to the cost of pavement marking.

3. **Time Period for Control.** Necessary traffic control devices shall be properly placed and in operation before construction is allowed to start. The devices shall be kept current and placed only in the areas of actual work activities. Traffic control devices shall be kept in place until the ENGINEER approves their removal after the pavement marking has dried and is determined to be ready for traffic.

4. **Operational Precautions.** Equipment shall not be prepared, filled, or cleaned, nor shall any equipment or material be stored on the roadway. These operations shall be conducted off the pavement without interfering with or endangering traffic.

D. Pavement Marking Application.

1. **Pavement Marking Paint and Glass Beads.**

   a. **Method of Application.** Pavement marking paint and glass beads shall be applied separately by machine. Where machine application in an odd-shaped area is not feasible, hand application is permitted.

   b. **Application Dates and Temperatures.** Pavement marking paint and beads (except for temporary stripe) shall not be applied before May 1 nor after October 1 except upon written permission of the ENGINEER. Pavement marking paint shall be applied only during daylight hours when the air and pavement surface temperatures are 40°F or warmer when applying solvent-based paint or 45°F or warmer when applying water-based paint. The paint shall not be applied when the air and pavement surface temperatures are expected or forecasted to be colder (lower) than the minimum application temperature.

New asphalt pavement shall be allowed to cool to a maximum temperature of 125°F and be given a minimum curing period of four hours prior to applying permanent striping.

c. **Rate of Application.** One gallon of paint shall cover a 4-inch wide stripe for a length of 280 to 320 feet, depending upon pavement surface texture. The paint shall not be diluted, but a small amount of naphtha thinner may be used to flush out paint containers. Glass beads shall be evenly distributed over the wet paint stripe at a rate of at least 6 pounds per gallon of paint. Beads shall be applied using an automatic pressure dispenser. If the application rates are not within the requirements, the marking application shall be stopped until corrections are made.

d. **Short-Term Pavement Marking.** Pavement marking paint and beads applied as short-term pavement marking shall be applied only during daylight hours. Application shall be made in a 4-inch width and a 10-foot length with unpainted gaps of 30 feet. The no-passing zone markings shall be made in a 4-inch width and a length as required to cover the no-passing zones. The paint and beads shall be applied as required and at the rate specified in Section 1210-4 D.1.c. Short-term pavement marking applied to the centerline shall be applied to the full length of the bituminous course and milled surface before sunset on the same day the work is accomplished. Paving or milling operations shall not resume if the short-term pavement marking has not been replaced as required.

Short-term pavement marking on the top lift shall be carefully placed with exact alignment and spacing so that the permanent striping will match when applied. Errors in alignment and spacing shall be corrected at the CONTRACTOR's expense, or removed just before the installation of the permanent striping.

When Type NR (Not Easily Removable) short-term pavement marking is specified, pavement marking paint and beads may be used in lieu of Type NR construction zone marking film.

e. **Short-Term Pavement Marking – Asphalt Seal Coat Projects.** Short-term pavement marking for asphalt seal coat projects shall consist of pavement marking paint and beads. Before sealing operations, spotting tabs shall be installed every 200 feet along the centerline and tabs shall also be placed to mark the beginning and end of the no-passing zones. The spotting tabs shall be removed by cutting the tabs flush with the roadway surface. Tabs shall not be pulled out. The cost of the spotting tabs and their installation and removal shall be incidental to the short-term pavement marking bid item.

The short-term pavement marking shall be applied before sunset each day to the full length of the roadway that received the bitumen and cover coat material that day. Seal coat operations shall not resume if the short-term

pavement marking is not in place as required. The broken line at centerline of two-lane, two-way roadways (yellow) or between lanes of multi-laned roadways (white) shall be 4 inches wide and 10 feet long followed by a 30-foot unpainted gap. The solid line barrier stripe (yellow) in no-passing zones shall be 4 inches wide, and the length shall be that required to cover the entire no-passing zone. Before applying the paint and beads, the areas to receive the striping shall be lightly broomed.

If the in-place short-term pavement marking has become obscured and has lost its required visibility due to being covered, or partially covered, by cover coat or blotter material, the material shall be removed from the striped areas by light brooming or compressed air before sunset. Damage to the cover coat material and striping resulting from the removal operation shall be corrected at the CONTRACTOR's expense.

The short-term pavement marking shall be carefully placed with exact alignment and spacing so that the permanent striping matches when applied. Errors in alignment and spacing shall be corrected at the CONTRACTOR's expense.

One gallon of paint shall cover a 4-inch wide stripe for a length of 200 to 240 feet, as directed by the ENGINEER. Glass beads shall be evenly distributed over the wet paint at the rate of at least 6 pounds per gallon of paint.

f. Tolerances.

(1) The length of the painted stripe shall not vary more than plus or minus 3 inches from the prescribed length.

(2) The width of the painted stripe shall not vary more than plus or minus 1/2 inch from the prescribed width.

(3) The length of the painted segment and gap shall not vary more than 6 inches in a 40-foot cycle.

(4) The tolerance from the proper alignment shall not vary more than plus or minus 2 inches.

(5) Dashed lines that are painted over existing dashed lines shall begin within 6 inches of the beginning of the existing line, unless otherwise directed by the ENGINEER.

2. Plastic Pavement Marking Film.

a. General. Plastic pavement marking film applied as a permanent pavement marking shall not be applied before June 1 nor after September 1 of any year. The permanent marking film shall not be applied when the pavement surface

temperature is 50°F or colder, nor shall the film be placed over painted markings. The pavement surface and the marking film shall be prepared for installation as required for the type of film used. The film shall be lap or butt spliced when required to join 2 lengths of film, and the film shall be cut at open joints or cracks in the pavement. The cut ends shall be firmly tamped in place.

b. Plastic Pavement Marking Film Application. Application of plastic pavement marking film, whether by contact cement or mechanical application, shall be made using the manufacturer's recommendation.

c. Short-Term Pavement Marking. Pavement marking tape applied as short-term pavement marking shall conform with the requirement for application of pavement marking tape. The tape shall be applied on the center line in a 4-inch width and a 10-foot length with a gap of 30 feet. The no-passing zone markings shall be made in a 4-inch width and a length as required to cover the no-passing zone. The short-term pavement marking shall be applied to the full length of the bituminous pavement and milled surface placed each day, and shall be completed before sunset each day. Paving and milling operations shall not resume if the striping is not in place as required.

Type R (Removable) or Type NR (Not Easily Removable) construction zone marking film shall be applied where specified. The film required shall be applied as specified for pavement marking film.

The CONTRACTOR shall remove the Type R marking film when required in the Contract or directed by the ENGINEER.

Pavement marking paint with beads may be used in lieu of Type NR construction zone marking film for short-term pavement marking.

3. Preformed Patterned Pavement Marking Film. Application of preformed patterned pavement marking film shall be according to the manufacturer's recommendation.

4. Pavement Marking Sheeting (Pressure Sensitive). This marking shall be applied as required in the Contract or by hand or mechanical methods to a pavement surface prepared as required for all pavement marking. The delineated position on the pavement surface shall be primed using the sheeting manufacturer's recommendations. The primed surface shall be air dried for 1 to 2 minutes before applying the sheeting. Mechanical application conforming to the sheeting manufacturer's recommendations shall be used, unless machine application is impractical. Sheeting shall be inlaid into the pavement by roller when the pavement is warm enough to accept the pavement marking sheeting without damaging the sheeting.

5. **Raised Pavement Markers.** Raised pavement markers shall be reflectorized. Broken lane lines and center lines on two-lane, two-way roadways shall consist of four markers on 3.33-foot centers with a 30-foot gap. Markers used for solid lines shall be spaced on 5-foot centers. Raised pavement markers used in double solid lines shall be placed side by side separated by a 4-inch gap.

   New concrete pavement (pavement that has had no traffic over it for a winter season) shall have markers placed on 5-foot centers for all solid lines.

E. Inspection and Acceptance.

1. **General.** Markings that are discolored, damaged by wind-blown dirt, or are ineffective at night will be rejected. Unsightly markings with uneven edge lines, poor longitudinal alignment, uneven adherence, missing portions, or other objectionable faults will be rejected. All rejected markings shall be repaired, or removed, and replaced at the CONTRACTOR's expense.

2. **Maintenance of Short-Term Pavement Markings.** Short-Term Pavement Markings used on the Project will be rated according to the American Traffic Safety Services Association's (ATSSA) *Quality Standards for Work Zone Traffic Control Devices*. The definition of "acceptable," "marginal," and "unacceptable" and the evaluation guidelines shall be as defined in ATSSA's *Quality Standards for Work Zone Traffic Control Devices*.

   At the time of initial set up and major phase changes, 100% of each type of short-term pavement marking (painted, tape, raised marker) shall be classified as acceptable. The CONTRACTOR shall certify in writing to the ENGINEER that all short-term pavement markings installed are classified as acceptable.

   The amount of acceptable markings of each type may decrease to the limits defined in the ATSSA standards as a result of damage or deterioration during the course of work. Pavement markings evaluated as unacceptable shall be replaced within 12 hours.

   Raised Pavement Markers shall be cleaned as necessary to remove dirt, mud, or other foreign material which reduces the brightness of the reflectorized sheeting.

   All markings no longer required shall be removed immediately.

3. **Pay Adjustment for Short-Term Pavement Markings.** If the Project is not completed and extends into winter suspension, the ENGINEER will inspect the markings before suspending the Contract; and any unacceptable markings shall be repaired before the CONTRACTOR is relieved of further liability.

   If the Contract must be carried through the winter due to CONTRACTOR-caused delays, markings shall be maintained throughout winter suspension by and at

the CONTRACTOR's expense. During the maintenance period, markings which are not functioning properly shall be replaced by and at the CONTRACTOR's expense. Failure to make these repairs will result in a reduced pay factor for the markings according to the following schedule:

% of Ineffective Striping Pay Factor	Pay Factor
10-20%/mile, and not more than 200 L. Ft. of markings missing in one continuous stretch	50% of Bid Price for that mile
Over 20%/mile, or more than 200 L. Ft. of markings missing in one continuous stretch	No payment for that mile

No deduction will be made for markings lost due to abrasion at approaches or due to snow removal equipment.

All markings no longer required shall be removed immediately.

1210-5 METHOD OF MEASUREMENT

A. Pavement Marking-Painted Line. This item will be measured by the linear foot of the various widths of painted line, complete, in place, and accepted. Only the painted portion of broken lines will be measured. Pavement Marking-Painted Messages will be measured by the square footage shown on the Plans, in place, and accepted by the ENGINEER.

B. Plastic Pavement Marking Film, Pavement Marking Sheeting, and Pre-formed Patterned Pavement Marking Film. This item will be measured by the Linear Foot of the various widths of installed line, complete, in place, and accepted. Only the installed portion of broken lines will be measured. Messages will be measured by the square footage shown on the Plans, in place, and accepted by the ENGINEER.

C. Short-Term Pavement Markings.

1. **Short-Term – ____-Inch Line (Painted, Tape, or Raised Markers).** This item will be measured by the linear foot in place. The longitudinal gaps will not be measured. If raised pavement markers are used, the length of measurement will be the length of a pavement line that would exist if paint had been installed.

2. **Short-Term – ____-Inch Line, Type R.** This item will be measured by the linear foot in place.

3. **Short-Term – ____-Inch Line, Type NR.** This item will be measured by the linear foot in place.

4. **Short-Term – Message, Type R.** This item will be the square footage as shown on the Plans in place.

5. **Short-Term – Message, Type NR.** This item will be the square footage as shown on the Plans in place.

   The price bid for Type R marking film shall include the cost of installation and removal.

D. Raised Pavement Markers. This item will be measured by the individual unit (Each) complete and in place.

E. Obliteration of Pavement Marking. This item will be measured by the square foot of pavement marking removed.

1210-6 BASIS OF PAYMENT

Payment will be made under:

Pay Item	**Pay Unit**
a. Pavement Marking Painted - ____ inch line	Linear Foot
b. Pavement Marking Painted – Message	Square Foot
c. Plastic Pavement Marking Film - ____ inch line	Linear Foot
d. Plastic Pavement Marking Film – Message	Square Foot
e. Preformed Patterned Pavement Marking - ____ inch line	Linear Foot
f. Preformed Patterned Pavement Marking – Message	Square Foot
g. Pavement Marking Sheeting - ____ inch line	Linear Foot
h. Pavement Marking Sheeting – Message	Square Foot
i. Short-Term – ____-Inch Line (painted, tape, or raised markers)	Linear Foot
j. Short-Term – ____-Inch Line, Type R	Linear Foot
k. Short-Term – ____-Inch Line, Type NR	Linear Foot
l. Short-Term – Message, Type R	Square Foot
m. Short-Term – Message, Type NR	Square Foot
n. Short-Term – Painted Line (Seal Jobs)	Linear Foot
o. Raised Pavement Markers	Each
p. Obliteration of Pavement Marking	Square Foot

This payment will be full compensation for all labor, equipment, and materials necessary to complete the work.

SECTION 1211 – TRAFFIC CONTROL

1211-1 DESCRIPTION

This work consists of furnishing, installing, and maintaining all required traffic control devices according to an approved traffic control plan or details shown on the Plans. This includes Specifications providing for watch persons, flaggers, pilot cars, and necessary precautions for protecting the public, the workers, and the work.

All traffic control devices and their placement shall meet the standards and requirements of the "Manual on Uniform Traffic Control Devices for Streets and Highways" (MUTCD) and the "Standard Highway Signs," published by the Federal Highway Administration.

The CONTRACTOR must submit a traffic control plan to the TRAFFIC ENGINEER for approval at least two (2) weeks prior to setting up the detour closing a roadway.

Press releases shall be submitted to the Engineering Department for review a minimum of three (3) days prior to each change in operation or phase. Once approved, they must be sent to local media as well as fire, police, and ambulance. Information shall include anticipated duration, detour routes, and pedestrian issues. A press release is required to announce the reopening of a detour when not otherwise notified.

The CONTRACTOR is responsible for the placement and maintenance of all the work zone signs and barricades during the utility construction. All traffic control devices shall be installed and maintained in a safe and orderly manner complying with the provisions of Chapter 6 of the most recent update of the Manual on Uniform Traffic Control Devices for Streets and Highways, U.S. Department of Transportation.

The CONTRACTOR is responsible for maintaining and protecting traffic during a temporary suspension of work.

The CONTRACTOR shall designate a superintendent and an alternate for emergency repair service to traffic control devices. Telephone numbers for these personnel shall be provided to the Project Manager. These personnel shall be available at all time to respond an emergency.

When an emergency occurs and the superintendent and alternate are not available to take protective measures, the City may authorize others to do the necessary work and deduct the cost of the work from the CONTRACTOR.

1211-2 MATERIALS AND EQUIPMENT

All materials and construction details not specifically addressed in the plans, Special Provisions and Construction Specifications for Municipal Public Works, Bismarck, North Dakota, shall be in conformance with Section 704 of the 2002 edition and supplements of the Standard Specifications for Road and Bridge Construction, North Dakota

Department of Transportation, and the provisions of Chapter 6 of the most recent update of the Manual on Uniform Traffic Control Devices.

Traffic Control Devices used on the project will be rated according to the American Traffic Safety Services Association (ATSSA) **Quality Standards for Work Zone Traffic Control Devices.** The definitions of "acceptable," "marginal," and "unacceptable" and the evaluation guidelines shall be as defined in ATSSA's **Quality Standards for Work Zone Traffic Control Devices.**

Payment for Traffic Control Devices, labor, plans, and maintenance shall be measured and paid by the lump sum as "Traffic Control" for each unit.

A. Sign Backing Materials. Materials for sign backing shall be aluminum, steel, plywood, or plastic of the size and thickness shown on the NDDOT Standard Drawings. Aluminum or steel backing shall meet and be processed according to Section 1211.

Plywood backing shall be of exterior grade or be overlaid with a plastic coating, and processed using recommendations of the reflective sheeting manufacturer. Plastic backing shall be processed using recommendations of the reflective sheeting manufacturer.

B. Reflective Sheeting. Orange diamond-shaped, rectangular, and square signs shall be faced with Wide Angle Prismatic Fluorescent Retroreflective Sheeting meeting Section 1212-2 G. Barricades and vertical panels shall be Wide Angle Prismatic Retroreflective Sheeting meeting Section 1212-2 F. Flexible reflective sheeting, Type III C or Type IV, shall be used on drums, cones, and tubular markers. All remaining signs and sign backgrounds shall be faced with Wide Angle Prismatic Retroreflective Sheeting meeting Section 1212-2 F.

C. Flexible Roll-Up Sign. The flexible roll-up sign shall be mounted in a sturdy frame to keep the sign flat and in proper position for viewing by the motorist. The frame shall be attached to a portable stand for placement on the road bed. The stand shall be weighted or designed to provide stability against wind. Flexible roll-up signs shall be fabricated to meet Section 1212-2 E.2.

D. Flat Sheet Sign Faces. All flat sheet sign faces, except for flexible roll-up signs as provided above, shall be fabricated to meet Section 1212-1.

E. Barricades. Barricades shall be constructed of lightweight materials. They shall be the type and length shown on the Standard Drawings.

Both sides of the barricade rail surface shall be covered with reflective sheeting as specified.

1. Wood Rails. Wood rails shall meet the Standard Rules of the American Lumber Standards. Application of reflective sheeting directly on wood rails shall be

made only after all edges and surfaces have been properly sanded, cleaned, sealed, resanded, and painted with a prime coat. The painted surface on which the reflective sheeting is applied shall be treated as specified by the reflective sheeting manufacturer. In lieu of treating the painted surface to receive the reflective sheeting, sheet aluminum having a minimum thickness of .040 inches may be attached to the barricade rails with non-rust fasteners. The aluminum sheet shall be fabricated and degreased as provided in Section 1211 before applying reflective sheeting.

2. **Aluminum Rails.** Aluminum rails shall be an extrusion of the size and shape shown on the Standard Drawings and shall meet ASTM Designation B221, Alloy 6063-T6. They shall be fabricated and degreased as provided in Section 1211 before applying reflective sheeting.

F. Delineator Drums. Drums shall be approximately 36 inches in height and a minimum of 18 inches in diameter at the top. They shall be constructed of durable plastic with horizontal, circumferential, orange and white reflectorized stripes as shown on the Standard Drawings. The reflectorized stripes shall be fabricated from Type III C or Type IV flexible reflective sheeting as provided in Section 1212-2. Delineator drums shall be weighted with sand placed at the bottom of the drum or constructed so that they can not be blown over or displaced by wind or passing traffic, and do not create a hazard if accidentally struck.

G. Traffic Cones. The cones shall be orange in color, shall be a minimum of 28 inches in height with a broadened base, and fabricated from materials that withstand impact. For nighttime use, cones shall have a minimum 6-inch wide white flexible reflectorized band placed a minimum of 3 inches; but not more than 4 inches from the top. An additional 4-inch white reflectorized band shall be placed a minimum of 2 inches below the 6-inch band. The cones shall be weighted at the base to prevent overturning by the wind.

H. Tubular Markers. Tubular markers shall meet the dimensions, color configuration, and installation details as shown on the Standard Drawings.

I. Vertical Panels. The vertical panels shall meet the dimensions, striping configuration, and colors shown on the Standard Drawings. The panels shall be fabricated as specified for flat sheet signs in Section 1211.

J. Delineators. Each delineator shall consist of an acrylic plastic or reflective sheeting reflector mounted on a post support according to the Standard Drawings.

K. Portable Barriers. Portable barriers shall be constructed of concrete. The barrier shall meet the details on the Plans or Standard Drawings.

L. Warning Lights. Warning lights shall be portable, lens directed, enclosed lights. Warning lights shall meet the requirements of the Institute of Traffic Engineers

"Purchase Specifications for Flashing and Steady Burn Barricade Warning Lights," latest revisions and the following table:

	Type A Low Intensity	Type B High Intensity	Type C Steady Burn
Lens Directional Faces	1 or 2	1	1 or 2
Flash Rate Per Minute	55 to 75	55 to 75	Constant
Flash Duration[1]	10%	8%	Constant
Min. Effective Intensity[2]	4.0 Candles	35 Candles	
Min. Beam Candle Power[2]			2.0 Candles
Hours of Operation	Dusk to Dawn	24 hrs./day	Dusk to Dawn

[1] Length of time that instantaneous intensity is equal to or greater than effective intensity.

[2] These values shall be maintained within a solid angle 9° on each side of the vertical axis, and 5° above and below the horizontal axis.

M. Advance Warning Flashing or Sequencing Arrow Panels. Advance warning flashing or sequencing arrow panels shall be used to divert and control traffic around construction or maintenance activities.

Advance warning arrow panels shall meet the following requirements:

Advance Warning Flashing or Sequencing Arrow Panel

Type	Minimum Size (in inches)	Minimum No. of Panel Lamps	Minimum Legibility Distance*
A	24 x 48	12	1/2 mile
B	30 x 60	13	3/4 mile
C	48 x 96	15	1 mile

*Minimum legibility requirements are the distances at which the arrow panel message can be comprehended by a driver on a sunny day or a clear night.

The panel face shall be solidly constructed and finished nonreflective black. Panels shall be mounted on a vehicle, trailer, or other suitable support. Vehicle-mounted panels shall be provided with remote controls.

Arrow panels shall be equipped with the following mode selection:

1. Left or right flashing or sequencing arrows, and

2. Double flashing arrows, or

3. Left or right sequencing chevrons, and

4. Caution.

Automatic light dimming controls capable of reducing rated lamp voltage a minimum of 50 percent shall be provided on each arrow panel. The dimming shall be controlled by a photoelectric cell which activates at sunup and sundown. The flashing rate of the lamps shall not be less than 25 nor more than 40 flashes per minute.

Minimum lamp "on" time shall be 50 percent for the flashing arrow and 25 percent for the sequential chevron.

The arrow panel lamps or lenses shall be recess-mounted or alternately equipped with an upper hood of not less than 180°. The color of the light emitted shall be yellow.

N. High-Level Warning Device. This warning device shall consist of a minimum of 3 flags and, when specified, a Type B high-intensity flashing light. The distance from the roadway to the bottom of the flasher lens or the lowest point of all 3 flags shall be at least 8 feet. The flags shall be a minimum of 16 inches square and shall be orange or fluorescent red-orange in color.

O. Temporary Construction Zone Marking and Temporary Striping. The temporary marking and striping shall meet Section 1210.

P. Flagging. STOP/SLOW Sign Paddles shall meet the details specified in the Standard Drawings. The paddle shall be fastened to a rigid handle of 5 to 8 feet in length. The paddle shall be fabricated from light semirigid material, and be octagonal in shape. To improve conspicuity, the paddles may be supplemented by one or two symmetrically positioned, alternately flashing, white high-intensity lamps on each side.

When nighttime flagging is required, sufficient auxiliary lighting shall be used to illuminate the flagging station. This lighting shall be supplied by the CONTRACTOR and set up in such a manner so that drivers are not blinded by it. A flashlight with a red transparent glow cone, reflectorized clothing, and a reflectorized stop-slow paddle are required for nighttime flagging operations.

1211-3 CONSTRUCTION REQUIREMENTS

A. General. The CONTRACTOR shall furnish, install, and maintain all required traffic control devices, and shall provide watchpersons and flaggers as necessary to protect the work and to ensure public and workers' safety. All required control devices shall be available for installation when needed and shall be maintained, relocated, covered, or removed as necessary. Standards for flagging shall be as specified in Section 1211-3 X.

When work zone signs placed as shown on the Standard Drawings interfere with permanent signs, the work zone signs shall be moved to locations that afford the best results. Messages shall be varied as required.

If the CONTRACTOR has not furnished, installed, located, maintained, or removed one or more traffic control devices as required, the ENGINEER may direct work to cease until the deficiencies have been corrected.

Traffic control devices shall be operated only as long as they are needed. Only those devices that apply to existing conditions shall be in place.

The traffic control devices shall have breakaway supports that meet the requirements of the AASHTO Roadside Design Guide Chapter 4 Section 4.1. All signs on fixed supports shall be placed on breakaway supports, unless they are located behind a barrier or crash cushion. The CONTRACTOR shall provide documentation showing that these requirements are being met for any sign supports used that do not comply with the NDDOT's Standard D-754-8.

Barricade rails and panels with stripes which begin at the upper right side and slope downward to the lower left side are designated as "right" panels and are to be used on the right side of a traffic lane. Stripes which begin at the upper left side and slope downward to the lower right side are designated as "left" panels and are to be used on the left side of a traffic lane.

B. Project Terminal Signing. Before work is started, the required traffic control devices shall be erected at each end of the project and at various locations within the Project as shown on the traffic control Plan drawings. These control devices shall remain in place and be maintained for the duration of the Project. The ENGINEER may direct their removal during winter or other lengthy periods of suspension.

C. Work Area Signing. Appropriate traffic control devices as shown on the traffic control Plan drawings shall be erected and maintained for each type of work area required by the operations. When no details are provided for the particular type of construction situation involved, traffic control devices shall be installed according to the MUTCD or as directed by the ENGINEER. No construction work shall be started until the proper traffic control devices for the work area are in place. If the CONTRACTOR's construction operations or sequence requires additional signing, flaggers shall be furnished at the CONTRACTOR's expense or construction operations shall be suspended in that area until the condition is corrected and the required signs have been installed.

When traffic is carried through the construction area, two-way traffic shall be maintained when practicable. One-way traffic shall be directed by flagpersons or maintained under control of an approved traffic signal system. All signs and other control devices shall indicate actual conditions and shall be relocated, removed, or changed, as conditions require. Signs necessary only during hours when work is actually being performed shall be removed or completely covered when no work is in progress.

Portable sign mountings shall be as shown on the Plans or as approved by the ENGINEER. Portable signs shall be used when construction operations in an area are temporary. Temporary operations are those that are less than 24 hours in duration. At times when portable signs are not required, they shall be moved to a minimum of 45 feet from the edge of the traveled lane or laid down on the inslope. Signs laid down on the inslope shall have stand bases constructed so the signs and bases can be placed flat with no portions of the sign or base projecting upward from the inslope more than 6 inches.

D. Existing Signs. Existing regulatory traffic signs which must be moved to accommodate construction shall be immediately reset.

The cost to remove and reset existing traffic signs to accommodate construction shall be included in the price bid for other items.

E. Route Markers. Route marker signs required for the Project and for CONTRACTOR-maintained detours will be furnished by the CONTRACTOR and shall be installed by the CONTRACTOR on supports furnished by and at the CONTRACTOR's expense.

F. Detour Signing. The CONTRACTOR shall furnish, install, and maintain all traffic control devices for detours.

G. Highways Closed to Traffic. When a detour is provided and traffic is not maintained through the construction area, necessary access to property abutting the Project shall be provided by constructing and maintaining temporary roads and approaches from the nearest crossroad. Traffic shall not be routed over detours not provided in the Contract documents without written authorization from the ENGINEER.

H. Restricted Speed Zones. Restricted speed zones and the speed limit to be posted for such zones will be designated in the Contract documents or determined by the ENGINEER.

I. Temporary Suspension. During a temporary suspension of work, the CONTRACTOR is responsible for maintaining and protecting traffic. When operations are suspended for the winter, the roadway and the traffic control devices will be maintained by and at the CONTRACTOR's expense. Before suspending operations for the winter, adequate approaches shall be constructed to all crossroads or intersecting roads which have been disturbed by construction operations. Access to the roadway from abutting property shall also be provided. Warning signs, barricades, and other traffic control devices shall be erected (or existing devices removed) as directed by the ENGINEER. Resetting of signs removed because of a winter suspension will not be measured for payment.

J. Barricade Application. Type I or Type II barricades shall be used as shown in the traffic control plan details where traffic is maintained through the construction area.

They may be used singly or in groups to mark a specific hazard, or used in a series to channelize traffic and shall not be set parallel to traffic. On high-speed roads or in situations where barricades may be overturned in the wind, the barricades shall be stabilized with sandbags placed on the lower parts of the frame or stays.

When a section of road is closed to traffic, Type III barricades shall be erected at the points of closure. They shall extend completely across the roadway and shoulders or from curb to curb. Where provision must be made for access of equipment and authorized vehicles, the Type III barricades shall be provided with gates or movable sections that can be closed when work is not in progress, or with indirect openings that discourages public entry. Where access is provided through the Type III barricade, an employee shall be designated to assure proper closure at the end of each working day.

When a road or street is closed, but access to local traffic must be furnished, the Type III barricades shall be arranged to permit local use but discourage through traffic. A sign with the appropriate legend concerning use by local traffic shall be installed.

Type III barricades shall be installed at the beginning and end of the project when so indicated in the Contract documents and shall not be placed parallel to traffic.

The required warning signs shall be mounted above the barricades.

If the construction zone encroaches onto sidewalks or crosswalks and pedestrians cannot be diverted to other walkways, barricades may be used to define the path.

K. Drum Application. Drums shall be used to channelize or delineate traffic flow and may be used singly or in groups to mark specific hazards. When drums are placed in the roadway, advance warning signs are required.

L. Traffic Cone and Tubular Marker Application. Traffic cones and tubular markers used to channelize traffic shall have adequate stability to prevent overturning or displacement by wind. Additional weighting may be required but shall not be so heavy to cause a hazard if struck.

M. Flexible Delineator Application. Flexible delineators used to channelize traffic and separate two-way traffic shall be located and attached as shown in the Contract documents.

N. Vertical Panel Application. Vertical panels shall be used as channelizing devices, warning devices, or windrow markers. Vertical panels shall be faced on both sides.

O. Delineator Application. Delineators shall be used in construction areas for guidance, to indicate roadway alignment, and to outline the required vehicle path. Delineators shall not be used as warning devices and, when used in a construction zone, shall be combined with approved warning devices.

Delineators shall be mounted on supports so the reflector is 4 feet above the roadway edge. White reflectors shall be used for delineators installed along the right side of the street or highway. Yellow reflectors shall be used for delineators installed along the left edge of divided streets, divided highways, and one-way roads.

Delineator spacing shall be as indicated on the traffic control plan sheets. Along roadway curves, delineators shall be spaced so that several delineators are always visible to the driver.

P. Portable Barrier Application. Traffic control plan sheets may require, or the CONTRACTOR may elect to use, portable barriers to separate the work area from the traffic area. For nighttime use, the barriers shall be supplemented by standard delineators or channelizing markings or devices.

When specified, warning lights shall be installed on continuous barriers. The first two warning lights on each side of the roadway shall be Type A flashers, and subsequent lights on the barrier shall be Type C steady burn lights. The ends of the barrier shall be protected by crash cushions or by flaring the barrier ends away from the traveled way as shown in the Contract.

Q. Lighting Device Application. Lighting devices shall be provided as required on the traffic control plan sheets to supplement signs, barricades, and other traffic control devices.

1. **Type III or IV Reflective Sheeting.** Flashing lights and steady burn lights on signs, drums, vertical panels, and barricades are not required when Type III or Type IV reflective sheeting is used.

2. **Flashing Lights (Type A, Low-Intensity).** Type A low-intensity flashers shall be used to warn drivers that they are approaching or traveling in a hazardous area.

3. **Flashing Lights (Type B, High-Intensity).** Traffic control plan sheets require installation of high-intensity flashers at extremely hazardous site conditions. The high-intensity flashers shall be operated 24 hours per day.

4. **Steady-Burn Lights (Type C).** The steady-burn warning lights shall be used to delineate the edges of the traveled way on detour curves, on lane changes, and along tapers. Spacing of steady-burn lights shall be as indicated on the traffic control plan sheets.

5. **Mounting Height of Warning Lights.** The mounting height of warning lights shall be as follows:

a. **Barricade and Portable Standards.** A minimum height of 36 inches from the bottom of the lens to the roadway.

b. **Signs.** The bottom of the light housing shall not be less than 2 inches nor more than 12 inches above the top of the sign.

c. **Vertical Channelizing Devices and Independent Supports.** The light shall be at least 4 feet and not more than 5 feet above the pavement.

6. **Advance Warning Arrow Panels.** The sequencing arrow panels shall be used to provide advance warning and directional information to assist in diverting and controlling traffic around construction activities being conducted on or adjacent to the traveled way. Other traffic control devices may be required in conjunction with the sequencing arrow panel. During nighttime operation of the flashing arrow panels, the lamps shall be automatically dimmed to 50 percent of the output.

7. **Floodlights.** If construction activities are performed at night, floodlighting shall be provided for the construction area and flagger stations. The area must be adequately illuminated without creating glare in the eyes of drivers.

R. High-Level Warning Device. High-level warning devices shall be used to supplement other controls and devices and shall be required in urban high-density traffic situations.

S. Pavement Marking Removal. Removal of existing marking and installation of temporary marking shall be as shown on the traffic control plan sheets. Inappropriate existing markings shall be removed and the new delineation placed before opening the affected lane or lanes to traffic. Removal of pavement markings shall not permanently damage the surface or texture of the pavement. Painting over existing stripes is not permitted. Where blast cleaning is used for removal of markings or other objectionable material, the sand or other blast material left on the pavement shall be removed immediately.

T. Construction Zone Marking. Yellow temporary marking shall be used to delineate traffic flow in opposing directions or mark the left edge of the pavement of divided highway or one-way roads. White temporary marking shall be used to delineate the separation of traffic flow in the same direction or mark the right edge of the pavement. The temporary markings shall be used in combination with appropriate warning signs, channelizing devices, and delineation to clearly indicate the required vehicle paths.

U. Traffic Control Personnel.

1. **Traffic Control Supervisor.** When called for on the Plans, the CONTRACTOR shall designate a qualified traffic control supervisor. This supervisor shall be in addition to the watchperson specified in Section 1211-3 U.2. If this traffic control

supervisor becomes unavailable on the project, the CONTRACTOR shall designate a qualified replacement supervisor.

a. Qualifications. The traffic control supervisor shall:

(1) Have completed an NDDOT-approved comprehensive course of study based on Part VI of the MUTCD and furnish proof thereof.

(2) Be familiar with the requirements of NDDOT traffic control plans and specifications.

(3) Have a total of at least 12 months field experience with traffic control plans, layouts, and maintenance.

(4) Be competent to supervise personnel in traffic control operations.

b. Duties. The traffic control supervisor shall:

(1) Provide traffic control as required by the plans, specifications, MUTCD, or as directed by the ENGINEER.

(2) Supervise the installation, operation, inspection, maintenance, and removal of the traffic control system.

(3) Correct traffic control conditions that cause erratic vehicle movements, unexpected braking, etc.

(4) Propose changes to improve traffic flow through the work zone.

(5) Be accessible to the job site within one hour of notification and be “on call” on a 24-hour basis.

(6) Provide the ENGINEER with documentation of all traffic control activities required in # (2) above.

(7) Function as watchperson in his/her absence.

c. Traffic Control Course. The course prescribed in Section 1211-3 U.1.a(1) above shall be the American Traffic Safety Services Association (ATSSA) 20-hour course, or the 3-day National Highway Institute (NHI) Course 38003, Design and Operation of Work Zone Traffic Control, or equal.

An equal course shall include the following subjects: Manual and Standard Signs used in Work Areas (3 hours); Channelizing Devices and Temporary Barriers, Pavement Markings, Lighting Devices, Arrow Displays and Special Devices, and Devices Location and Placement (4 hours); Layout for Traffic Control Devices, Motorist Characteristics, and Options and Alternatives (4

hours); Installation and Removal of the Traffic Control Zone, and Operation and Maintenance of the Traffic Control Zone (4 hours); Flagging Operations, Legal Liability and Record Keeping, and Emergency Situations (5 hours).

Workshops shall be included in the above time frames covering (a) design problems, (b) installation and removal, and (c) operations and maintenance. Each session shall also include a question and answer period.

2. **Watchpersons.** Watchpersons shall be provided to patrol the project to assure that the traffic control devices are properly placed in accordance with the traffic control plans and standards. The project shall be patrolled daily at least once during daylight before 10 a.m. and at least once during darkness after 10 p.m., including weekends and days when no work is in progress. The CONTRACTOR shall provide written documentation to the ENGINEER of the watchperson's hours and activities.

   The CONTRACTOR shall immediately assist the watchperson, whenever needed, to correct conditions that cause erratic traffic movement, unexpected braking, etc., and erect, repair, replace, or relocate the required traffic control devices. Emergency assistance shall be provided to motorists, when needed, due to roadway conditions. Suspension of watchperson service may be permitted during periods of authorized suspension or after substantial completion of the work, provided the job site is in safe condition.

V. Emergency Control. Written notification shall be provided to the ENGINEER, the State Police, and local law enforcement agencies of the names, addresses, and telephone numbers of the CONTRACTOR's Superintendent and an alternate. Either the Superintendent or the alternate shall be on call for notification of any emergencies that may arise during periods when construction operations are not in progress. Changes in the designation of the Superintendent or the alternate shall immediately be made known, in writing, to the ENGINEER and the law enforcement agencies.

The CONTRACTOR's Superintendent or alternate, or traffic control foreman shall meet with the ENGINEER before work commences to review traffic control plans, and shall be available at all times to periodically discuss modifications to the traffic control plan with the ENGINEER or his representative.

When an emergency occurs and the Superintendent or alternate are not available to take protective or corrective measures, the Department will authorize others to do the necessary work and deduct the cost of the work from the CONTRACTOR.

W. Maintenance of Traffic Control Devices. Traffic Control Devices used on the Project will be rated according to the American Traffic Safety Services Association's (ATSSA) *Quality Standards for Work Zone Traffic Control Devices*. The definitions of "acceptable," "marginal," and "unacceptable" and the evaluation guidelines shall be as defined in ATSSA 's *Quality Standards for Work Zone Traffic Control Devices*.

At the time of initial set up and major phase changes, 100 percent of each type of device (signs, barricades, vertical panels, drums, cones, tubular markers, warning lights, arrow panels, etc.) shall be classified as acceptable. The CONTRACTOR shall certify in writing to the ENGINEER that all traffic control devices installed are classified as acceptable.

For signs, barricades, vertical panels, drums, cones, tubular markers, and arrow panels the number of acceptable devices of each type may decrease to 75 percent of the initial quantity as a result of damage or deterioration during the course of work. The remaining 25 percent of each type of devices may be in the marginal category. Warning lights shall be “acceptable” or “marginal” at the limits defined in the ATSSA standards. All unacceptable devices found on the job site shall be replaced within 12 hours.

Traffic control devices not covered by the evaluation guidelines shall be maintained to operate effectively and be in good repair.

Traffic control devices shall be cleaned as necessary to remove dirt, mud, or other foreign material which reduces the brightness of the reflectorized sheeting or warning lights.

X. Flagging. Flaggers shall be clean, neat, and fully dressed at all times while on duty either day or night. For daytime work, the flagger’s vest, shirt, or jacket shall be orange, yellow, strong yellow green, or fluorescent versions of these colors. For nighttime work, similar outside garments shall be retroreflective. The retroreflective material shall be orange, yellow, white, silver, strong yellow-green, or a fluorescent version of one of these colors and shall be visible at a minimum distance of 1,000 feet. The retroreflective clothing shall be designed to identify clearly the wearer as a person and be visible through the full range of body motions.

Each flagger shall be furnished with the booklet, “Instructions to Flaggers,” and shall observe the rules and regulations contained therein. The CONTRACTOR shall obtain copies of these instructions from the Department.

Flaggers shall not be assigned other duties while working as authorized flaggers.

The CONTRACTOR is responsible for providing trained flaggers. All flaggers must view a flagging video training tape and pass a flagging written examination before performing flagging on the project. The CONTRACTOR will acknowledge in writing, before any flagging work begins on the project, that all flaggers will have viewed a flagging video tape and passed a written examination before performing flagging on the project.

Y. Pilot Car. A pilot car shall be used to guide vehicles through or around the construction area when traffic is reduced to a single lane. The pilot car operation

must be coordinated with flagging operations or other controls at each end of the one-lane section.

Z. Flag Application. Flags shall be attached to warning signs if indicated in the traffic control plan sheets.

1211-4 METHOD OF MEASUREMENT

A. Individual traffic control items shall include furnishing, installing, maintaining, relocating, and removing as dictated by the work in progress and will be measured for payment as follows:

1. **Traffic Control Signs.** Traffic Control Signs will be measured by the unit and will be inventoried when complete, in place, and accepted by the ENGINEER. All posts and mounting hardware required to complete the installation will be included in the pay item. The total units of Traffic Control Signs shown in the Plans is estimated and may be adjusted according to the needs of the Project.

2. The following devices will be measured by the number of each installed, complete, in place, and accepted by the ENGINEER:

   a. Barricades (by type)

   b. Delineator Drums

   c. Traffic Cones

   d. Delineators

   e. Flexible Delineators

   f. Vertical Panels

   g. Sequencing Arrow Panels (by type)

   No measurement will be made of devices which are installed without being authorized by, or directed by, the ENGINEER.

B. Traffic Control. When “Traffic Control” is included in the Contract as a lump sum, it includes all traffic control necessary for the project construction except as otherwise provided. Payment includes furnishing, installing, and maintaining the required signs, barricades, and other warning devices; relocating or removing devices as dictated by the work progress; and providing watchpersons to patrol the work.

No payment (over the lump sum bid for “Traffic Control”) will be authorized for additional traffic control devices required as a result of the CONTRACTOR’s method

or sequence of operation, whether or not the type of operation is included in the typical work area layouts shown on the traffic control plan sheets.

Payment (over the lump sum bid for "Traffic Control") may be authorized for additional traffic control devices if the type or number of such devices requested by the ENGINEER exceeds the requirements indicated by the typical work area layouts shown on the traffic control plan sheets, or when the need for additional traffic control devices is created as a result of Contract revisions.

C. Obliteration of Pavement Marking. Obliteration of Pavement Marking will be measured according to Section 1210-5 E., and paid for according to Section 1210-6.

D. Flagging. Flagging will be measured by the hour of authorized flagging. Authorized flagging shall be the actual hours of flagging authorized by the ENGINEER.

1211-5 BASIS OF PAYMENT

A. When the item "Traffic Control" is bid as a Lump Sum, payment for the Contract Lump Sum bid will be made according to the following schedule:

Total Payment to Date		
40%	-	When all initial traffic control devices required to start construction have been installed.
50%	-	When Contract is 25% complete.
75%	-	When Contract is 50% complete.
90%	-	When Contract is 75% complete.
100%	-	When Contract is complete.

When additional traffic control devices requested by the ENGINEER qualify for payment according to Section 1211-4 B, payment for furnishing and installing such devices will be made using the prices listed in the "Rental Rates for Equipment and Traffic Control Devices" published by the Department.

The above payments for installation include the cost of removing or relocating the traffic control devices. No additional payment will be made when traffic control devices are covered up, or temporarily taken out of service, then returned to use.

All standard traffic control devices furnished by the CONTRACTOR shall remain the property of the CONTRACTOR.

If the CONTRACTOR is required to furnish special non-standard signs not shown on the Plans, payment will be made at invoice price plus 15 percent, and the sign will become the Department's property after it has been removed from service. Payment for sign supports and installation of special signs will be made using the prices listed in the "Rental Rates for Equipment and Traffic Control Devices" published by the North Dakota Department of Transportation.

B. Obliteration of Pavement Marking, when included in the Contract as a separate pay item, will be paid for according to Section 1210-6.

When no pay item is provided, the Obliteration of Pavement Marking will be paid for under Section 104-3 D.

C. Flagging will be paid for at the Contract Unit Price per hour for the total authorized hours of flagging as measured in Section 1211-4 D.

D. Pilot Car will be paid for at the Contract Unit Price per hour for the total hours authorized by the ENGINEER.

E. Short-Term Pavement Markings, when included in the Contract as separate pay items, will be paid for at the Contract Unit Price under Section 1210-6.

F. Items requested by the ENGINEER that are not listed on the Plans or Standard Drawings as incidental items or separate pay items such as Flashing and Steady Burn Lights, Concrete Median Barriers, Attenuation Devices, etc., will be paid for under Section 104-3 D.

G. The cost of providing Traffic Control Supervisors, when needed, and Watchpersons will be incidental to the prices bid for other items.

SECTION 1212 – HIGHWAY SIGNS AND POSTS

1212-1 DESCRIPTION

This work item consists of furnishing, fabricating, and installing highway signs, delineators, and supporting structures.

1212-2 MATERIALS

A. General. All materials furnished and used in this work shall be new and shall meet the Plans, the NDDOT Standard Drawings, Section 1212 of the Standard Specifications,and the following requirements:

Signs, supporting structures, breakaway bases, anchor units, brackets, stringers, and hardware shall be fabricated to meet the dimensions, metal gauge, and bolt holes set forth in the Contract and NDDOT Standard Drawings. All flat sheet sign backings shall be aluminum with reflective sheeting applied as specified.

The traffic control sign details not otherwise specified shall meet the MUTCD published by the Federal Highway Administration.

All sign faces shall be according to the detail drawings and the alphabets shown in the MUTCD, Standard Highway Signs, and Standard Alphabets, published by FHWA. Sign faces not detailed in these publications shall meet the detailed drawings shown in the supplementary Standard Highway Signs booklet published by the NDDOT.

Regulatory, warning, and guide signs shall be detailed and dimensioned according to detailed drawings of the Standard Highway Signs booklet. These detail drawings are available to the sign fabricator upon request from the NDDOT. Signs not illustrated in these booklets shall be as shown on the NDDOT Standard Drawings. The last number in the sign numbers shown is the width of the sign required.

Variable message sign dimensions have been computed by the North Dakota Department of Transportation in order to draft these signs by mechanical means. These message computations have been tabulated and shall be used to lay out these sign faces in the fabricator's shop. These tabulated sheets will be furnished to the CONTRACTOR upon request after the Contract has been awarded.

B. Concrete. Concrete used in this item of work shall be Class AE Portland Cement concrete mixed and proportioned as specified in Section 500.

C. Reinforcing Steel. The reinforcing steel shall meet Section 501-2.9.

D. Delineators. Delineators shall meet Section 1212-6.

E. Hardware and Fittings. Signs, supporting structures, breakaway bases, anchor units, brackets, stringers, and all hardware and fittings shall meet Section 1212-5 A.

F. Posts. Posts shall meet Section 1212-5 B.

1212-3 CONSTRUCTION REQUIREMENTS

A. Locating and Positioning Signs and Sign Structures. Each sign and structure shall be located according to the Plans or, where necessary, for maximum effect of the sign. Installed signs and structures will be inspected at night for maximum effect and minimum specular reflection. If any sign exhibits specular reflection or is ineffective at night, the sign shall be adjusted at the CONTRACTOR's expense.

Signs and delineators located less than 30 feet from the pavement edge shall be erected with the sign face truly vertical and turned 93° away from the center and direction of travel of the lane which the facility serves. Signs located 30 feet or more from the edge of the pavement edge shall be erected with the sign face truly vertical and aligned 90° from the center and direction of travel of the lane which the offset sign serves. Special attention shall be given to the location and positioning of signs and delineators at the point where lanes divide, or on curves, to avoid specular reflection and to obtain maximum effectiveness of the facility.

B. Sign Fabrication.

1. **General.** All sign backing for flat sheet signs shall be aluminum unless noted otherwise, with reflective sheeting applied as specified herein. On large variable message signs the messages, symbols, and borders shall consist of directly applied reflective sheeting cut to desired shapes. The message, symbols, and border shall be applied as specified by the sheeting manufacturer.

2. **Fabrication of Sign Backing.** Sign backings shall be cut to size and shape and shall be free of buckles, warps, dents, cockles, burrs, and all defects resulting from fabrication. The surface of all signs shall be plane surfaces. All cutting, shearing, and drilling or punching of holes (except mounting holes for demountable letters, numerals, symbols, and borders) shall be completed before metal degreasing and application of reflective sheeting.

3. **Cleaning and Processing.** Cleaning and processing of sign backing shall take place before applying the reflective sheeting. Cleaning and processing shall be performed using the sheeting manufacturer's instructions and recommendations as well as the requirements of Section 1212.

   All metal sign backing material shall be handled only by handling devices or clean canvas gloves between cleaning and applying reflective sheeting. Metal shall not come in contact with greases, oils, or other contaminants before application of reflective sheeting. When backing materials are chromate-conversion coated beforehand and are allowed to set for several days before

applying reflective sheeting, the application surface shall be given a solvent wipe before reflective sheeting application.

4. **Fabrication of Flat Sheet Signs.** The background of the flat sheet signs shall be screened on reflective sheeting as specified by the manufacturer of the reflective material and as specified herein. Messages, symbols, and borders may be screened on or directly applied reflective sheeting. Directly applied reflective sheeting shall be applied as specified by the sheeting manufacturer. Colors shall meet the requirements of the Contract and as shown in the MUTCD. Care shall be taken so screening inks are compatible with reflective sheeting backgrounds.

   Reflective material shall meet Section 1212-2.

   The reflective sheeting used on flat sheet sign backings larger than the manufacturer's material shall require splicing. All sheeting on each individual sign shall be from the same manufacturer's lot, and shall be spliced in one direction only. No more than one splice will be permitted per sign. Vertical splices shall be in the center of the sign. Horizontal splices, if used in lieu of the vertical splice, shall be in the center of the sign with the top portion overlapping the bottom portion of the sheeting when it is in the upright position.

   Heat-activated, adhesive-coated, reflective sheeting may be overlapped not less than 3/16 inch or by a butted gap not to exceed 1/32 inch. Splices will be permitted only on sign screens processed with transparent colors. Pressure-sensitive, adhesive-coated, reflective sheetings shall be overlapped not less than 3/16 inch.

   The overlapped splice shall be made without screening paints between the reflective sheeting.

   The sign face shall be processed and finished with material as specified by the sheeting manufacturer. Processing of Type III A or III B Reflective Sheeting with screened-on messages shall be accomplished before applying to the sign backing. Processing of Type II Reflective Sheeting may be accomplished before or after applying to the sign backing.

   The finished signs shall have a smooth, uniform surface. All letters and numbers shall be clear cut and sharp.

5. **Fabrication of Panel Signs.** The background shall be applied to the panels as specified by the reflective sheeting manufacturer.

   Reflective sheeting shall be overlap spliced. The splice shall be overlapped not less than 3/16 inch, and sheeting applied to panels shall extend over the edges and down the side legs a minimum of 1/16 inch. Splices shall be at a 90° angle to the length of the panel. The splices shall be uniformly and neatly made

throughout their entire length. No individual panel shall have more than two splices, and the minimum distance between adjacent splices shall be 8 feet.

When guide sign symbols (e.g., handicap, hospital, and airport symbol signs) are required on larger guide signs as part of the message, the symbol signs shall be riveted to the larger signs and be installed at the locations shown on the plans. The cost of the symbol signs and the labor, equipment, and material needed to attach them will not be bid separately, but will be included in the price bid for the panel or overlay of the sign.

6. **Date of Fabrication.** All signs receiving new sign facings shall be dated with the month and year fabricated. The date shall be placed on the back of the metal backing on the lower corner of sign near the edge closest to traffic so that it can be read from the ground. The dating layout shall consist of 1/4 inch high numbers on a 2 1/4 inches long by 1 3/4 inches high pressure-sensitive label. The numbers imprinted on the upper part of the label shall be 1 through 12, with the last two digits of four consecutive years printed across the bottom (as 92, 93, 94, 95). The month and year of fabrication shall be punched out. The label shall meet Section 1212-4. The cost of furnishing, fabricating, and installing labels shall be included in the price bid for "Flat Sheet for Signs Type II and III A," "Panel for Signs Type II and III A," "Refacing Signs Type II and III A," or "Overlay Panel Type II and III A."

C. Packaging, Labeling, Handling, and Shipping.

Completed signs shall be dry before packaging or storing. Packaged signs that become wet before use shall not be used. A warning label with instructions designed to prevent damage to the signs shall be on the outside of the package, and an additional warning label shall be placed in the packages between the first and second sign, before the last sign, and after each five signs in a package. Packaged signs shall not be banded and shall be stored and shipped on edge.

Packaging shall be done so that the signs are protected during storage, shipping, and handling. Packaged signs shall be slipsheeted using the material and methods recommended by the sheeting manufacturer.

Unmounted reflective sheeting may be stacked flat to a maximum height of 5 inches for temporary storage. Otherwise, they shall be stored on edge. The sheeting on signs shall not be exposed to temperatures above 150°F. The slipsheeting shall be left on the sign face until mounted.

Panel signs may be assembled or separated into sections for ease in handling, storing, and shipping. In lieu of packaging, the sign faces may be turned toward each other and fastened together firmly with sufficient spacers to prevent the sign faces from touching. Sign faces that cannot be protected by packaging or fastening face to face shall have protective covers placed over them.

D. Label (Handling, Storage, and Installation Instructions). The label referred to in Section 1212-3 C shall contain the following instructions:

1. **Loading on Vehicles.** Signs shall be secured vertically in racks to prevent them from rubbing, scratching, or marring front surfaces. Signs that have protective wrappings or slipsheeting shall be kept dry.

   Signs shall be carefully unloaded, stacked on edge off the ground in an upright position.

2. **Storage at Job Site.** Signs shall be stored indoors and upright on edge to prevent damage to the reflective sheeting.

   Signs shall be kept dry. Packaged signs that get wet will be rejected.

3. **Installation.**

   a. Signs shall be handled carefully and not scuffed or walked on.

   b. Nylon washers shall be used between flat washers and sign face for all Type III and IV reflective sheeted signs.

   c. When washing signs is necessary, a soft bristle brush or sponge and water shall be used.

E. Erection of Sign Supports and Delineators.

1. **General.** The ENGINEER will verify the support lengths on all new sign supports prior to the materials being ordered by the CONTRACTOR. All sign supports shall be firmly set and plumb after erection. All concrete foundations shall be constructed as specified, with the top sloped enough to drain away from the sign support. All exposed concrete above ground surface shall be given a rubbed finish. Excess excavation material removed to set sign supports shall be disposed of at the CONTRACTOR's expense. A driving cap shall be used when driving a sign support.

2. **Delineator Posts.** Delineator posts shall be driven without being damaged. If the drilled or punched hole method is used, the hole shall be large enough so the post can be set without damage. Any damage to utilities or structures as a result of construction operations shall be repaired at the CONTRACTOR's expense.

3. **Anchor for Telescoping Perforated Tubes and Flange Channel Supports.** Anchors for telescoping perforated tubes and flange channel supports shall be driven. The perforated tube anchor shall be driven to a maximum of 4 inches above the ground or sidewalk and 4 inches maximum installed height above ground or sidewalk for flange channel anchor.

Anchors shall be installed at Plan length, unless the ENGINEER determines a shorter length is sufficient due to good soil bearing developed when driving the anchor. Anchor lengths may be reduced to a minimum of 3 feet. When set in sidewalk, the anchor plate may be omitted.

The sidewalk shall be cored to install the anchor unit and the cored area shall be filled with new concrete to restore the sidewalk surface.

4. **Tubular Sign Supports.** Tubular Sign Supports shall be set in a Class AE Portland Cement Concrete base, constructed as shown on the Plans. Breakaway base plates shall be assembled with the bolts torqued to Plan requirements. The plates shall be carefully placed so the tapered bolt slot tapers toward approaching traffic. Either the stub post or the anchor bolt design may be used as detailed. If the anchor bolt design is used, a Portland Cement Grout shall be used to raise the top of the foundation to a snug fit under the base plate. When standard round pipe posts are shown on the Plans for signs that have two or more posts, the CONTRACTOR may elect to use either round sign supports or W-shape posts. Signs with one post shall use the round sign supports as shown on the Plans.

5. **Splicing.** Splicing is permitted on telescoping and flange channel posts only to obtain the required post length. A splice shall be more than 5 feet above ground, and only one splice is permitted per post. Splicing costs shall be at the CONTRACTOR's expense. The weight of the splice will not be added to the post pay weight.

6. **W-Shaped Sign Supports.**

   a. The CONTRACTOR shall install H-Pile footings for W-Shaped Sign Supports constructed as shown on the Plans. Breakaway base plates shall be assembled with the bolt torqued to Plan requirements. The plates shall be carefully placed so the tapered bolt slot tapers toward approaching traffic. W-Shaped Supports shall use the stub post design.

   b. Flame Cutting of W-Shape Posts. The gas cutting torch may be used for cutting metals or preparing joints. Carbon steel above 0.30 percent carbon, high alloy steels, heat treated steel, and plated metals shall not be flame cut unless subsequent corrective treatment is provided as approved by the Materials and Research Engineer.

   All flame cutting work shall be done by the oxyacetylene gas method or other method approved by the ENGINEER. The maximum permissible deviation from true lines shall be 1/16 inch. Repairs of edge defects shall be done according to Section 3.2 of AWS Structural Welding Code, as amended by AASHTO Specifications for Welding of Structural Steel Highway Bridges. In general, the roughness of flame cut surfaces shall be no greater than an

ANSI roughness value of 1000 microinches. All slag from flame cutting shall be completely removed.

When flange plates or other members are cut to a curve, the curve shall be uniform to the radius required. A series of straight cuts tangent to the curve shall not be acceptable.

When ends of members which are to take bearing are cut with a torch, a suitable allowance in their length shall be made to permit proper milling or planing.

Joints for welding may be prepared by “flame cutting” or “flame gouging” provided all slag and oxidized metals are removed.

c. **Edge Finishing.** Members formed to specific size by shearing of structural steel plates having a thickness of 1/2 inch or more, shall be machined or planed to correct size by removing not less than 1/4 inch of metal. All field splice plates and stiffeners less than 1/2 inch in thickness shall have a minimum of 1/8 inch of metal removed by machining or planing after shearing.

F. Mounting Flat Sheet Signs Type III A and III B Sheeting. Flat sheet signs shall be bolted to the supports and shall have a nylon washer between the flat washer and the sign face. Rubber incased washers may be substituted for nylon washers on work zone traffic control signs specified under Section 1211.

G. Removing and Resetting Signs and Supports. Existing signs and supports shall be removed and reset as specified. All signs and supports not to be reset shall be stockpiled on the Project Right-of-Way at designated locations. The stockpiled signs and supports shall remain the Department’s property.

Removed or reset signs and supports that become damaged during removing, resetting, or stockpiling shall be replaced at the CONTRACTOR’s expense.

Existing signs and supports shall be removed as construction progresses, and shall be immediately reset or installed. The CONTRACTOR shall install new signs or reset signs as shown on the Plans. All signs and supports shall be on the Project site at the time construction begins. The CONTRACTOR may choose to temporarily reset existing signs, or temporarily install new signs. The cost of installing and resetting signs temporarily shall be included in the price bid for other items. Any damaged signs or supports shall be replaced at the CONTRACTOR’s expense.

H. Remove Sign Foundations. This item consists of removing signs, steel pipe supports, and concrete foundations or piling and restoring the surface to match the surrounding area. Concrete foundations shall be removed to a depth of 2 feet below the ground line unless otherwise specified in the Plans. The signs, steel pipe

supports, piling, and concrete foundations removed shall become the property of the CONTRACTOR and be disposed of outside the highway right-of-way.

I. **Revise Fuse Joints.** This item consists of removing the existing front fuse plate and back hinge plate and installing a new front perforated fuse plate and a new back hinge plate as shown on the detail sheets in the Plans. All nuts will be tightened securely, torquing is not required.

J. **Overlay Panel Sign Refacing.** This item consists of removing the legend, border, and symbol on those signs that have demountable copy and place overlay panels on the signs. Those signs that have direct applied reflective sheeting legends, borders, and symbols need not have these removed. The new changed legends, borders, and symbols shall be direct applied to the thin metal overlay panels and installed on the existing signs. The legends, borders, and symbols are deemed not salvageable and shall be disposed of by the CONTRACTOR outside the highway right-of-way.

The overlay panels shall be fabricated from 0.063-inch aluminum alloy conforming to ASTM B209 Alloy 6061-T6 or 5052-H38 with mill finish. The overlay panels shall be fabricated according to Section 1212-1 and degreased, etched, and coated according to Section 1212-1 of these specifications. The reflective sheeting applied to the overlay panels shall meet the requirements of Section 1212-2 of these specifications.

The letters, numerals, symbols, and borders shall be directly applied according to Section 1212.04. The Reflective sheeting shall meet the requirements of Section 1212-2. Type IIIA reflective sheeting letters, numerals, symbols, and borders shall be used on Type II background. Type IIIA reflective sheeting letters, numerals, symbols, and borders shall be used on Type IIIA background. The overlay panels, after fabrication, shall be installed on the existing signs with aluminum blind fasteners 5/32 inch diameter with 1/8 inch out the back of the existing sign backing or other non-corrosive fasteners approved by the ENGINEER. The panels are to be butted together with no overlap. Where legends, numerals, symbols, and borders cross the butt joints, they will need to be cut.

Signs that are to be overlaid that are larger than manufactured overlay panels shall be fabricated as follows: Overlay panels shall be a minimum of 18 inches wide and a maximum of 4 feet wide. Panels will have a minimum length of 8 feet. If the overlay panels do not cover the full height of the sign, the overlay panels shall be placed on the lower portion of the sign first so the longer side of the panel is vertical. The remaining panels shall be placed above these panels with their long side placed horizontally. The overlay panels shall be riveted around the panel with the rivets 1 inch from the edge of the panel. The rivets shall be evenly spaced with no more than 12 inches between rivets, horizontally and vertically. Panels more than 24 inches wide shall be riveted down the middle of the panel at 12-inch centers.

K. Auxiliary Signs. The auxiliary signs used with route markers shall be the same background color as the route markers they are used with. (Interstate - Blue, State - White, Interstate Business Loop - Green, and County - Blue.)

L. Road Closed, Type III Barricade, Snow Fence Combination. This item consists of a diamond grade Road Closed Sign R-11-2-48, 3 post mounted to a Type III Barricade per NDDOT detail D-754-32 Assembly No. 37. The barricade shall be anchored 4 feet deep with minimum 2-inch x 2-inch perforated tubes per NDDOT detail D-754-18. Orange plastic safety fence shall be installed with steel fence posts spaced 8 feet apart and behind the road closed sign. The barricade shall be installed across the entire width of the proposed street, curb to curb. This combination shall be set no more than 10 feet beyond the end of the pavement. This combination shall also be in accord with standard detail 1212-1.

M. Relocate Road Closed, Barricade, Fence Combination. This item consists of removing and resetting combination as specified in 1212-3(L), including replacing any damaged items.

1212- 4 METHOD OF MEASUREMENT AND BASIS OF PAYMENT

METHOD OF MEASUREMENT

A. Flat Sheets, Panels, and Extruded Aluminum Panels. Flat sheets, panels, and extruded aluminum panels for signs will be measured to the closest 1/10 square foot, complete, in place, and accepted by the ENGINEER. All hardware, stringers, and brackets required to attach signs to the posts shall be included in the pay item.

B. Galvanized Steel Posts.

1. Galvanized Steel Posts –Telescoping Tube and Flange Channel. Telescoping Tube and Flange Channel posts will be measured by the linear foot, complete, in place, and accepted by the ENGINEER. All sizes will be measured and paid for as “Galvanized Steel Posts – Telescoping Perforated Tube or Flange Channel.”

The post length shall be measured from the top of the post to the bottom of the anchor unit, as shown on the Plans. The sleeves and breakaway base, if included, will not be measured for payment, but will be considered incidental to the cost of the post.

2. Galvanized Steel Posts – Standard Pipe (single). Single post signs will be measured by the linear foot of each size installed and accepted by the ENGINEER. The post length shall be measured from the top of the breakaway base to the top of the post, as shown on the Plans. The concrete base will be paid for separately.

3. **Galvanized Steel Posts – W-shaped Posts (two or more).** W-shaped posts will be measured by the linear foot of each size installed and accepted by the ENGINEER. The post length, the 12-foot driven pile length, and the 2-foot stub post, as shown on the Plans, will be included in the length of post to be measured and paid for.

C. Breakaway Bases. Breakaway bases for standard pipe, W-shape, and telescoping tubes will not be measured, and all hardware, stub posts, slip bases, and assembly will not be measured but will be incidental to the Contract Unit Price bid for posts.

D. Delineators. The quantity will be measured by the number of delineators of each type installed, complete with reflectors.

E. Concrete Foundation. When concrete foundations are used on single post signs, the concrete will be measured by the cubic yard based on the quantity shown for each foundation complete, in place, and accepted by the ENGINEER. Reinforcing steel will not be measured but shall be included in the price bid for concrete.

The splices, post caps, plates, bolts, cutting fuse joints, and assembly will not be measured but will be incidental to the post.

F. Reset Sign Panels. The quantity to be paid for will be measured by the number of locations at which a sign, or a sign assembly, has been reset. Signs and assemblies will be measured in place and accepted by the ENGINEER.

G. Reset Sign Supports. The quantity to be paid for will be measured by the number of supports installed, complete, and accepted by the ENGINEER.

H. Removed Signs and Supports. Removed signs and supports will not be measured for payment, but will be incidental to other bid items. Cost of removal shall be included in the price bid for other items.

I. Remove Sign Foundations. The item “Remove Sign Foundations” will be measured by the number of foundations removed. The quantities measured will be paid for at the Contract Unit Price, and will be full compensation for all labor, equipment, and material necessary to complete the removal and disposal.

J. Revise Fuse Joint. The item “Revise Fuse Joint” will be measured by the number of fuse joints revised. The quantities measured will be paid for at the Contract Unit Price and will be full compensation for all labor, equipment, and material necessary to complete the work.

K. Overlay Panel. The item “Overlay Panel” will be measured by the square foot of panel in place and accepted by the ENGINEER. The quantities measured will be paid for at the Contract Unit Price and shall include all labor, equipment, and material needed to complete the work.

L. Road Closed, Barricade, Fence. This item, "Road Closed, Barricade, Fence," will be measured and paid per each combination complete in place and accepted by the ENGINEER.

M. Relocate Road Closed, Barricade, Fence. This item shall be measured and paid per each relocation complete in place and accepted by the ENGINEER.

BASIS OF PAYMENT

Payment will be made at Contract Unit Prices for the following:

Pay Item	**Pay Unit**
Flat Sheet for Signs, Type II, III A, or III B Reflective Sheeting	Square Foot
Panel for Signs -Type II, III A, or III B Reflective Sheeting	Square Foot
Extruded Aluminum Sign Panels Type III A, and III B Reflective Sheeting	Square Foot
Delineators, Type A, B, C, D, or E	Each
Class AE Concrete – Sign Foundations	Cubic Yard
Reset Signs	Each
Reset Sign Supports	Each
Galvanized Steel Posts – Telescoping Perforated Tube or Flange Channel	Linear Foot
____" Galvanized Steel Post – Standard Pipe (Single Post)	Linear Foot
____" Galvanized Steel Posts (two or more)	Linear Foot
Remove Sign Foundations	Each
Revise Fuse Joint	Each
Overlay Panel	Square Foot

This payment will be full compensation for all labor, equipment, and materials necessary to complete the work.

1212-5 SIGN BACKING MATERIAL

A. Materials.

1. **Flat Sheet Aluminum.** Flat sheet aluminum shall be an alloy meeting ASTM B209 alloy 6061-T6, or 5052-H38 with mill finish.

2. **Extruded Aluminum Panels.** Extruded Aluminum Panels shall meet ASTM B221 Alloy 6063-T6. The panels shall be furnished in 12-inch and 6-inch sections as shown on the Plans. All panels shall be flat and straight within commercial tolerances established by the aluminum industry.

B. Shop Surface Preparation and Processing. All sign backing shall be clean and free of rust, white rust, oil, and dirt. The holes shall be shop drilled to the sizes and at locations shown in the Contract. Holes required in the sign backing shall not be field drilled.

1. **Degreasing.** The extruded aluminum panels shall be rubbed with a clean white cloth after degreasing and if any sticky material shows up on the cloth, the panels shall be degreased again. All aluminum sign backing shall be degreased by one of the following methods:

   a. **Vapor Degreasing.** Aluminum materials shall be immersed in a saturated vapor of trichloroethylene. Trademark printing shall be removed with a lacquer thinner or a controlled alkaline cleaning system.

   b. **Alkaline Degreasing.** The aluminum shall be immersed in an alkaline solution controlled and titrated according to the solution manufacturer 's recommendations. The immersion time shall be dependent upon the gauge of the metal and the amount of soil to be removed.

2. **Etching.** All sheet aluminum shall be etched after degreasing. Extruded aluminum panels which have a roughened surface texture suitable for paint or sheeting shall not be etched after degreasing unless the ENGINEER determines the panels are unsuitable. Etching shall be performed by one of the following methods:

   a. **Acid Etch.** The aluminum shall be etched in a 6 percent to 8 percent solution of phosphoric acid at 100°F, or a proprietary acid etching solution. It shall be rinsed after etching with cold running water followed by a hot water rinse.

   b. **Alkaline Etch.** The aluminum shall be etched in an alkaline solution controlled by titration. The length of time the aluminum is etched and the temperature and concentration of the solution shall comply with the solution manufacturer's instructions. The aluminum shall be well rinsed after etching. Smut on the aluminum shall be removed with an acidic chromium solution recommended by the solution manufacturer and then well rinsed.

3. **Coating.** Aluminum panels that have not had reflective sheeting applied for several days or longer, after being etched, shall be treated with a light, tightly adherent chromate conversion coating before applying the reflective sheeting. The chromate conversion coating shall be free of powdery residue and shall range in color from a silvery iridescence to a pale yellow. The coating shall meet ASTM B449, Class 2, 10-35 milligrams/square foot with a median of 25 milligrams/square foot as an optimum coating weight.

4. **Drying.** All sign backing material shall be dried with forced hot air after preparation and processing.

1212-6 RETRO-REFLECTIVE SHEETING MATERIALS

A. General. The retroreflective sheeting stored under normal conditions shall be used within one year from the manufactured date. The packaging cartons or roll goods shall be marked with the manufacturer's lot numbers and manufacture date.

The surface of the barricade rails, drums, or cones shall be treated as recommended by the sheeting manufacturer before applying the reflective sheeting.

Type III C reflective sheeting shall have an identification symbol on the surface to differentiate it from other types of sheeting. The identification symbol shall not interfere with the function of the sheeting, but shall be visible to inspectors day or night without the use of special devices. The symbol shall be in a repeat pattern such that any 4-inch by 8-inch or 5-inch by 5-inch piece of the sheeting contains at least one full symbol.

The durability of the retroreflective sheeting shall be substantiated by the following accelerated weathering tests:

1. **Accelerated Outdoor Test.** When the retroreflective sheeting is processed and applied according to recommended procedures, the sheeting shall be weather-resistant, resistant to dirt and fungus accumulation, and following cleaning, shall show no discoloration, cracking, crazing, blistering, or dimensional change, and have not less than 50% for Type II and IV sheeting and not less than 80% for Type III A sheeting of the specified minimum brightness values shown in ASHTO M268 measured at an observation angle of 0.2° and an entrance angle of -4° when exposed to accelerated weathering for 30 months, south-facing, unprotected at 45°.

2. **Accelerated Machine Test.** The retroreflective sheeting shall meet the artificial weathering requirements of AASHTO M268 measured at an observation angle of 0.2° and an entrance angle of -4°.

   The CONTRACTOR shall furnish written evidence showing conformance with one of the following:

   a. The accelerated outdoor test, done in North Dakota or in a state located at lower latitudes, or

   b. The accelerated machine test and 3 years of performance in the field with no problems.

   The CONTRACTOR shall secure from the manufacturer all warranties and guarantees with respect to materials, parts, workmanship, or performance which the products covered by the proposal bear, and include these warranties and guarantees with the certification.

B. Type II and III A Retroreflective Sheeting Material. Type II and III A retroreflective sheeting shall meet AASHTO M268 and the following:

Processed retroreflective sheeting shall be applied to approved sign base material and cleaned according to manufacturer's recommendations for use on traffic control signs. The CONTRACTOR shall furnish a written assurance that the sheeting will meet the requirements of the following tables throughout the satisfactory performance life and be effective for its intended purpose when viewed from a vehicle.

TYPE II RETROREFLECTIVE SHEETING

Sheeting Type And Color	Average Minimum Candelas per foot Candle per sq. ft. at 0.2° divergence and -4° incidence*	Satisfactory Performance Life
Silver-White #1	30.0	5 years
Silver-White #2	36.0	5 years
Yellow	20.0	5 years
Red	5.0	5 years
Blue	2.0	5 years
Green	3.0	5 years
Orange	10.0	5 years
Brown	0.4	5 years

TYPE III A RETROREFLECTIVE SHEETING

Sheeting Type And Color	Average Minimum Candelas per fort Candle per sq. ft. at 0.2° divergence and -4° incidence*	Satisfactory Performance Life
Silver-White	200.0	10 years
Green	36.0	10 years
Yellow	136.0	10 years
Red	36.0	10 years
Orange	80.0	3 years
Blue	16.0	10 years

*Candlepower measurement shall be made, following sign cleaning, in accordance with procedure recommended by the sheeting manufacturer.

C. Type III B Retroreflective Sheeting. Type III B retroreflective sheeting shall consist of optical lens elements adhered to a synthetic resin and encapsulated by a flexible transparent plastic that has a smooth outer surface. The sheeting shall have a pre-coated adhesive protected by an easily removable liner. This sheeting is intended for use on rigid substrate signs and barricades used in the construction work zone. Type III B retroreflective sheeting shall meet AASHTO M268 and the following:

The CONTRACTOR shall furnish a written assurance that the sheeting will meet the requirements of the following table throughout the satisfactory performance life and be effective for its intended purpose when viewed from a vehicle:

TYPE III B RETROREFLECTIVE SHEETING

Sheeting Type And Color	Average Minimum Candelas per foot Candle per sq. ft. at 0.2° divergence and -4° incidence*	Satisfactory Performance Life
White	200	3 years
Yellow	136	3 years
Orange	80	3 years
Prestriped Barricade	200/80	3 years

*Candlepower measurement shall be made, following sign cleaning, in accordance with procedure recommended by the sheeting manufacturer.

The impact resistance shall be tested on reflective sheeting, applied according to the manufacturer's recommendations to a cleaned, etched aluminum panel of Alloy 6061 T 6,0.063 inches by 3 inches by 5 inches and conditioned for 24 hours at 0°C.

The sheeting to be tested for flexibility shall be conditioned for 24 hours at 0°C.

D. Type III C Retroreflective Sheeting. Type III C retroreflective sheeting shall consist of optical lens elements adhered to a synthetic resin and encapsulated by a flexible transparent plastic that has a smooth outer surface. The sheeting shall have a pre-coated adhesive protected by an easily removable liner. This sheeting is intended for use on plastic reboundable devices such as drums and flexible delineation posts. Type III C retroreflective sheeting shall meet the weathering requirements of AASHTO M268, Type IV and the following:

The CONTRACTOR shall furnish a written assurance that the sheeting will meet the requirement of the following table and be effective for its intended purpose when viewed from a vehicle.

TYPE III C RETROREFLECTIVE SHEETING
Average minimum Candelas per foot candle per square foot.

Observation Angle	Entrance Angle	White	Yellow	Orange
0.2°	-4°	250	170	100
0.2°	+30°	150	100	60
0.5°	-4°	95	62	30
0.5°	+30°	65	45	25

The impact-resistant aluminum panel shall be the same as Type III B reflective sheeting.

The impact resistance shall be tested on a Gardner Variable Impact Tester, I6-1120 using a 4-pound weight with a 5/8-inch rounded tip dropped from a 100 inch-pound setting.

Type III C reflective sheeting performance on reboundable plastic substrates shall be measured using the following test:

The device shall be impacted 3 times by a 4,000 pound vehicle, with a 20-inch bumper, at 40 mph. Each impact shall be a direct hit (glancing blows will not be allowed). After the impacts, the reflective sheeting shall be considered performing satisfactorily when no loss of sheeting results and there is no visible change in day and night performance (when viewed from 500 feet).

The sheeting to be tested for flexibility shall be conditioned for 24 hours at 0°C.

E. Type IV Reflective Sheeting. The Type IV reflective sheeting shall consist of high-gloss transparent ultra-violet light-stabilized polyester film bonded to a layer of polyester cube corner prisms with not less than 40,000 prisms per square inch meeting AASHTO M268 and the following:

1. **Type IV, Class 1 Reflective Sheeting.** The backing for the polyester sheeting used on barricade rails, drums, and traffic cones shall be an opaque-white plasticized polyester film not less than 0.004 inch thick with an adhesive backing meeting AASHTO M268, Class 1.

2. **Flexible Rollup Sign, Non-Adhesive Backing Fabric.** The polyester sheeting on the flexible rollup portable signs shall be coated on both sides with orange pigment polyester and shall meet the following specifications:

Base Fabric

Fiber	1,000 denier polyester
Weight	3 ounces/square yard
Fabric Count	10 warp, 10 fill

Coated Fabric

Total Weight	14 ± 1/2 ounces/square yard
Type of Coating	PVC
Color	Orange
Distribution	60 face, 40 back

Mechanical Properties		**Federal Standard 191 Method**
Tensile Strength	Warp 250, Fill 200	5100
Tear Strength	Warp 85, Fill 95	5134.1
Low Temperature	-65°F	
High Temperature		
Continuous	+180°F	
Abrasion Resistance (Taber)	1700 Cycles	5306
Flame Resistance	California Fire Marshall Approved Reg. No. F 102.4	

F. Wide Angle Prismatic Reflective Sheeting. The sheeting shall consist of prismatic lenses formed in a transparent synthetic resin, sealed, and backed with an aggressive pressure sensitive adhesive protected by a removable liner. The sheeting shall have a smooth surface with a distinctive interlocking diamond seal pattern and orientation marks visible on the face.

MINIMUM COEFFICIENT OF RETROREFLECTION
(Candelas per footcandle per square foot)
90° Rotation Angle

Observation Angle (Deg.)	**Entrance Angle (Deg.)**	**White**	**Orange**
0.2	-4	800	300
0.2	+30	400	150
0.2	+50	120	50
0.5	-4	200	100
0.5	+30	100	50
0.5	+50	40	20

Daytime color shall conform to the table shown below. Color of sheeting mounted on aluminum test panels shall be determined instrumentally in accordance with ASTM E1164. Values shall be determined on a Hunter Lab Labscan 6000 0/45 Spectrocolorimeter with option CMR 559. Computations shall be done in accordance with ASTM E308 for the 2° observer.

COLOR SPECIFICATION LIMITS* (DAYTIME)

									Reflectance Limit Y (%)	
Color	1		2		3		4			
	X	Y	X	Y	X	Y	X	Y	Min	max.
White	.305	.305	.355	.355	.335	.375	.285	.325	40	–
Orange	.583	.416	.523	.397	.560	.360	.631	.369	12	30

*The 4 pairs of chromaticity coordinates determine the acceptable color in terms of the CIE 1931 standard colorimetric system measured with standard illuminant D65.

The sheeting shall show no cracking outside the impact area when the face of the panel is subjected to an impact of 100 inch-pounds, using a weight with a 5/8 inch diameter rounded tip dropped from a height necessary to generate an impact of 100 inch-pounds, at temperatures of both 32°F and 72°F.

The impact-resistant aluminum panel shall be the same as required for Type III B reflective sheeting.

The Retroreflective Sheeting shall be processed and applied to aluminum sign blank materials in accordance with the sheeting manufacturer's instructions. The sheeting shall perform effectively for three (3) years. If, within three (3) years from the date of acceptance, the sheeting has deteriorated due to natural causes to the extent that (1) the sign is ineffective for its intended purpose when viewed from a moving vehicle under normal day or night driving conditions by a driver with normal vision; or (2) the coefficient of retroreflection, after cleaning, is less than 400 for white and 150 for orange when measured at 0.2° observation and -4° entrance at 90° rotation; new sheeting will be furnished and installed by the CONTRACTOR.

G. Fluorescent Orange Wide Angle Prismatic Retroreflective Sheeting. The sheeting shall consist of prismatic lenses formed in a transparent fluorescent orange synthetic resin, sealed, and backed with an aggressive pressure sensitive adhesive protected by a removable liner. The sheeting shall have a smooth surface with distinctive interlocking diamond seal pattern and orientation marks visible from the face.

MINIMUM COEFFICIENT OF RETROREFLECTION
(Candelas per footcandle per square foot)
90º Rotation Angle

Observation Angle (Deg.)	Entrance Angle (Deg.)	Orange
0.2	-4	200
0.2	+30	120
0.2	+50	50
0.5	-4	80
0.5	+30	50
0.5	+50	20

Daytime color and maximum spectral radiance factor (peak reflectance) shall be determined in accordance with ASTM E991 using a Hunter Lab Labscan 6000 0/45.

COLOR SPECIFICATION LIMITS (DAYTIME)

Color	1		2		3		4		**Reflectance Limit Y (%)**	
	X	Y	X	Y	X	Y	X	Y	min	max.
Orange (new)	.583	.416	.523	.396	.560	.360	.631	.369	30	–
Orange (weathered)	.583	.416	.523	.396	.560	.360	.631	.369	20	–

Nighttime color shall be determined in accordance with ASTM E811 and calculated in the u,' v ' coordinate system in accordance with ASTM E308. Sheeting shall be measured at 0.33D observation and -4° entrance at 90° rotation.

COLOR SPECIFICATION LIMITS (NIGHTTIME)

Color	1		2		3		4	
	U'	V'	U'	V'	U'	V'	U'	V'
Orange (new) (weathered)	.583	.416	.523	.396	.560	.360	.631	.369

The sheeting impact resistance requirements shall be the same as in Section 1212-2 F.

The impact-resistant aluminum panel shall be the same as that required in Section 1212-2 F.

The field performance requirements shall be the same as specified in Section 1212-2 F., except that coefficient of refraction for the fluorescent sheeting can be no lower than 100.

1212-7 PIGMENTED PLASTIC FILM, PRESSURE-SENSITIVE ADHESIVE

A. Description. This material shall be flexible, pigmented plastic film completely precoated with a pressure-sensitive adhesive. The adhesive shall be protected by a treated paper liner which shall be removable without soaking in water or other solvents. The material shall be available in colors listed in Section 1212-3 B.7.

B. Material Requirements. Material requirements shall be as follows:

1. **Thickness.** The thickness of the plastic film with adhesives shall be a minimum of 0.003 inch and a maximum of 0.0045 inch.

2. **Film.** The unapplied and applied film shall be readily processed and shall ensure adequate adhesion with process or printed inks recommended by the manufacturer.

3. **Flexibility.** The material shall be sufficiently flexible to permit application over and conformance to moderately-contoured surfaces.

4. **Gloss.** The film shall have a minimum initial 60° gloss value of 35 when tested according to ASTM D523, measuring at least 3 portions of the film to obtain uniformity.

5. **Adhesive.** The precoated adhesive shall form a durable bond to smooth, clean, corrosion-resistant, and weather-resistant surface; shall be of uniform thickness; shall be non-corrosive to applied surfaces; and shall have no staining effect on the film. The adhesive shall adhere securely at temperatures of -30°F to +200°F; shall not crack, chip, or peel voluntarily; nor shall it be removed from the panel in one piece without the aid of a tool.

6. **Sunlight Resistance.** There shall be no effect on the adhesive tack or performance following exposure of the adhesive face under a new General Electric RS Sunlamp for a period of 6 hours at a distance of 8 inches.

7. **Exterior Exposure.** The unprocessed material shall withstand the years of exposure, listed below by color, in a vertical, south facing exterior exposure in Texas. During the exposure, the unprocessed material shall show no appreciable discoloration, cracking, crazing, blistering, delamination, or loss of adhesion. A slight amount of chalking is permissible. The CONTRACTOR shall furnish a written assurance from the manufacturer that the sheeting will meet the requirements of the following table and be effective for its intended purpose when viewed from a vehicle, throughout the satisfactory performance life:

Color	Satisfactory Performance Life
White	7 years
Black	7 years
Yellow	5 years
Aluminum	5 years
Insignia Blue	5 years
Transparent	5 years
Red	3 years
Gold	3 years

The CONTRACTOR shall secure from the manufacturer all warranties and guarantees with respect to materials, parts, workmanship, or performance which the products covered by the proposal bear, and include these warranties and guarantees with the certification.

8. **Fungus Growth.** The film shall not support fungus growth.

9. **Plastic Lettering.** Plastic lettering film as furnished in rolls, sheets, or letters shall be free from ragged edges, cracks, blisters, streaks, foreign matter, or other surface imperfections which would make it unsuitable for usage. The plastic lettering film shall be capable of being readily cut with scissors, knives, blades, or shears without cracking, crazing, checking, or flaking.

1212-8 LETTERS, NUMERALS, SYMBOLS, AND BORDERS FOR PANEL SIGNS

A. General. All letters, numerals, symbols, and borders shall meet the requirements shown in the Contract and the MUTCD.

All letters, numerals, symbols, and borders shall have a regular outline and be clean-cut and sharp. All letters, numerals, and symbols shall have a continuous stroke and border. In special cases, symbols may have a broken stroke and border, provided they do not exceed more than 2 increments and that they are necessary for manufacturer's fabrication.

Blind rivets used for mounting shall conform to the Plans and shall extend past the back of the sign backing for a minimum distance of 1/8 inch. They shall be made of non-rust material.

B. Demountable Reflectorized Cutout Letters, Numerals, Symbols, and Borders. Demountable reflectorized cutout type letters, numerals, symbols, and borders shall consist of adhesive-coated reflective sheeting permanently adhered to a flat sheet aluminum backing. Type III and IV reflective sheeting meeting Section 1212-2 shall be used.

The reflective sheeting shall be applied to the properly prepared aluminum with the equipment and in the manner prescribed by the sheeting manufacturer.

Letters, numerals, symbols, and border backing shall be aluminum alloy meeting ASTM B209, Alloy 6061-T6 or 5052-H38 with mill finish and of the thickness shown on the Plans. Aluminum backing shall be properly degreased and etched as specified in Section 1212-1 B.

Mounting holes shall be uniformly spaced around the letters or characters and shall have the edge clearance shown in the Contract. The spacing shall be determined by the character size and shape. Mounting holes shall be spaced no more than 8 inches on centers, except for characters of 8 inches high or less. For characters 8 inches high or less, the maximum spacing of mounting holes shall be 4 inches. Mounting holes shall be drilled by the manufacturer.

Each letter, numeral, symbol, and border shall be offset, unless otherwise specified, as shown on the Plans with aluminum shim spacers meeting ASTM B221, Alloy 2024. Finish of the letters, numerals, symbols, and borders shall be done with material and in the manner specified by the manufacturer of the reflective sheeting.

C. Demountable Cutout Letters, Symbols, Numerals, and Borders Using Acrylic Plastic Reflectors. Demountable cutout letters, symbols, numerals, and borders shall consist of acrylic plastic prismatic reflectors supported by embossed aluminum frames.

1. Acrylic Plastic Reflectors. The reflectors shall meet the following:

a. Material. The material shall be an acrylic plastic made from methyl methacrylate. The reflector shall have a clean, transparent face (lens). The back shall be opaque and shall be made of identical material to the lens. It shall be fused to the lens around the entire perimeter to form a permanent seal against dust, water, and water vapor.

The lens shall have a smooth front surface free of indentation or projection other than identification. The rear surface of the lens shall have a prismatic configuration to effect a total internal reflection of light. The lens shall be colorless.

b. Optical Requirements. The optical requirements shall be tested as specified in Section 1212-6 B.2.c. with the following minimum values:

Observation Angle Degrees	Entrance Angle Degrees	Specific Brightness Candelas/Ft. Candle/Sq. Ft.
0.2°	0°	3.0
0.2°	20°	1.2

c. **Durability.** The reflectors shall conform to Section 1212-6 B.2.d.

d. **Corrosion.** The assembled cutout letter, symbol, or accessory shall withstand the combined corrosion test of ASTM B117.

2. **Embossed Aluminum Frames.** All letters, numerals, and symbols shall be fabricated from aluminum alloy meeting ASTM B209, Alloy 3003 sheet aluminum. Border strips shall be fabricated from aluminum alloy meeting ASTM B211, Alloy 6061-T6 sheet aluminum of the thickness shown on the Plans. Fabrication requirements are as follows:

Mounting holes shall be provided within frames to permit the use of non-rust screw, rivets, or other common non-rust fasteners.

The size and spacing of reflector holes shall afford maximum night legibility and visibility to the finished cutout figures.

After metal fabrication has been completed, the finish process shall be as follows:

Aluminum frames shall be degreased, etched, and given an alkaline chrome surface treatment and then rinsed and dried before prefiring.

The pre-prepared frames shall be sprayed with enamel slip consisting of a finely ground water-suspended glass frit, pigment, suspension agent, and opacifiers. Firing temperatures range from 930°F to 1,010°F depending on frit formulation, alloy, etc. Oven temperature shall be controlled ±1°F. Temperatures for baking on enamel shall be as specified by the manufacturer of the enamel slip.

D. Direct Applied Type III A and III B Reflective Sheeting Letters, Numerals, Symbols, and Borders.

1. **General.** The letters, numerals, symbols, and border shall consist of adhesive-coated, pressure-sensitive reflective sheeting meeting Section 1212-2. The material used for fabrication of letters, numerals, symbols, borders, and route markers shall be sampled and tested as specified for other reflective materials.

2. **Fabrication.** Letters, numerals, symbols, and borders shall be cut from reflective sheeting and shall have smooth regular outline, free from ragged or torn edges. Letters, numerals, and symbols having interior or exterior corners shall have these corners cut with a smooth 3/16 inch ±1/16 inch radius. Border corners and strips shall have no corner radius. Route markers used in conjunction with direct-applied letter shall be applied to 0.040 aluminum backing and shall be attached with blind rivets or other common non-rust fasteners. Fasteners shall be placed a maximum of 6 inches on center around the perimeter of the shield. The reflective sheeting shall be of the same type

specified for the letters. All sheeting, numerals, symbols, and borders shall show careful workmanship and shall be of regular outline.

1212-9 POSTS AND HARDWARE FOR SIGNS

A. Hardware for Signs.

1. **General.** All aluminum bolts, nuts, U-bolts, lock washers, and washers shall be given at least a 0.002-inch anodic coating and chromate seal. All steel bolts, nuts, U-bolts, lock washers, and washers shall be galvanized steel meeting ASTM A153.

   Use of substitute alloys in lieu of the alloy specified for various items of "Hardware for Signs" may be approved by the ENGINEER upon submission of documented evidence that the proposed substitute alloy has applicable qualities equal to or superior to the designated alloy.

2. **Bolts.** Aluminum panel bolts, etc., shall be fabricated of aluminum alloy meeting ASTM B211, Alloy 2024-T4 or 6061-T6.

   Steel panel bolts, machine bolts, etc., shall meet ASTM A307.

3. **Nuts.** Aluminum nuts, hex nuts, vandal-resistant nuts shall be fabricated of aluminum alloy meeting ASTM B211, Alloy 6061-T6.

   Steel hex nuts shall meet ASTM A307.

   In lieu of using torque wrenches to obtain the required torques for fuse joints and slip base used in the breakaway system, the Torque Control Nut System may be used. This system shall provide automatic torque control, consistently-controlled preload, vibration resistance, high strength, easy installation, simple inspection, and resistance to weather effects.

   The torque control nut shall be designed to mate with standard high-strength bolts meeting ASTM A325. The minimum stripping strength of the threads shall be equal to or shall exceed the strength level of the mating bolts.

   The self-locking quality of resistance to loosening shall meet the tests in Federal Specification MIL-N-25027 and shall be installed according to the manufacturer's recommendations.

4. **Washers.** Aluminum lock washers shall be fabricated of aluminum alloy meeting ASTM B209, Alloy 7075-T6.

   Aluminum flat washers shall be fabricated of aluminum alloy meeting ASTM B209, Alloy 2024-T4.

Steel lock washers shall be fabricated of steel meeting ANSI B27.1.

Steel flat washers shall be fabricated of steel meeting ASTM A307.

Plastic washers shall be fabricated to the sheeting manufacturer's specifications.

5. **Stringers.** Aluminum stringers shall be fabricated to Plan dimensions and made of aluminum alloy meeting ASTM B221, Alloy 6061-T6 or ASTM B308, Alloy 6061-T6.

   Steel stringers shall be fabricated to Plan dimensions and made of steel meeting ASTM A36.

6. **Aluminum Alloy Castings.** Brackets, post caps, and fuse plates may be either permanent mold castings or sand castings.

   Aluminum alloy permanent mold castings shall meet ASTM B108, Alloy SG70A-F or SG80A-T6.

   Aluminum alloy sand castings shall meet ASTM B26, Alloy SG70A-F or SG70A-T6.

7. **Steel Castings.** Brackets, post caps, and fuse plates shall meet AASHTO M103, Grade 65-35.

8. **U-Bolts.** Aluminum U-bolts shall be fabricated of aluminum alloy meeting ASTM B211, Alloy 2017-T4.

   Steel U-bolts shall be fabricated of steel meeting ASTM A307.

9. **Anchor Bolts.** Anchor bolts, anchor studs, nuts, and washers shall be fabricated of steel meeting ASTM A307.

   All nuts, washers, and anchor studs shall be galvanized steel meeting ASTM A153.

   The hex bar shall be tapped with U.S. Steel. Standard right thread, both ends, and made of steel meeting ASTM A307.

10. **Attachment Clip and Plate.** Attachment clip and plate for attachment of steel panels shall be fabricated as shown in the Contract, and made of steel meeting ASTM A283 and galvanized in conformance to ASTM A153.

11. **Fuse Joint Bolts.** Aluminum fuse plate bolts and washers shall be fabricated from aluminum meeting ASTM B211, Alloy 2024-T4.

Steel fuse plate bolts and washers shall be fabricated from steel meeting ASTM A325, and nuts shall be of the capacity to develop the bolt strength. Bolts, nuts, and washers shall be galvanized according to ASTM A153.

12. **Breakaway Base Bolts.** All breakaway base bolts shall have bolts and washers fabricated from steel meeting ASTM A325, and nuts shall be of the capacity to develop the bolt strength. Bolts, nuts, and washers shall be galvanized according to ASTM A153.

B. Posts.

1. **General.** Tubular post size, length, and weight shall be as shown in the Contract for each type of sign.

   Welding on aluminum shall be done according to Section 5 and welding on galvanized steel shall be done according to Section 4 of the AASHTO Standard Specifications for Structural Supports for Highway Signs, Luminaires, and Traffic Signals.

   All markings on posts, signs, casting, etc., shall be removed after erection.

2. **Aluminum Tubular Posts and Accessories.**

Material	**Specification**
Drawn Seamless Tubes and Extruded Round or Square Tubes	ASTM B210, Alloy 6061-T6 or ASTM B241, Alloy 6061-T6
Extruded Structural Shapes	ASTM B221, alloy 6061-T6
Breakaway Bases	ASTM B209, Alloy 6061-T6
Fuse Plates	ASTM B209. Alloy 6061-T6
Fuse Plate Bolts and Washers	ASTM B211, Alloy 2024-T6

3. **Steel (Galvanized) Posts and Accessories.**

Material	**Specification**
Standard Steel Pipe	AASHTO M111, M183, and M232
Breakaway Bases	AASHTO M183 and M232
Fuse Plates	AASHTO M183 and M232

4. Square Steel Telescoping Tubular Posts. Tubing shall be of the size and shape shown in the Contract and shall meet the following requirements:

a. Material. Steel posts shall conform to the standard specifications for a Grade 55 hot rolled carbon sheet steel, structural quality, ASTM designation A570.

b. Shape. The cross section of the post shall be square tube formed of 12 gauge (.105 U.S. Steel. gauge) and 10 gauge (.135 U.S.S. gauge) steel, carefully rolled to size and shall be welded directly in the corner by high frequency resistance welding and externally scarfed to agree with corner radii.

c. Finish. Signposts shall be manufactured from hot-dipped galvanized steel conforming to ASTM specification A653, designation G90. The corner weld shall be zinc coated after scarfing operation. The steel shall be coated with a chromate conversion coating and a clear organic polymer topcoat. Both the interior and the exterior of the post shall be galvanized.

d. Cross Section. Perforated sign posts shall be one or more of the following sizes:

Size	U.S.S. Gauge	Weight (lbs./foot)
1 1/2" x 1 1/2"	12	1.70
2" x 2"	12	2.42
2 1/4" x 2 1/4"	12	2.77
2 1/2" x 2 1/2"	12	3.14
2 3/16" x 2 3/16"	10	3.43
2 1/2" x 2 1/2"	10	4.01

e. Holes. Holes shall be 7/16 ±1/64 inches in diameter on one (1) inch centers on all four sides down the entire length of the post. The holes shall be on centerline of each side in true alignment and opposite each other directly and diagonally.

f. Length. The length of each post shall have a permissible length tolerance of ±1/4 inch.

g. Telescoping Properties. The finished posts shall be straight and have a smooth, uniform finish. It shall be possible to telescope all consecutive sizes of square tubes freely and for not less than ten feet of their length without the necessity of matching any particular face to any other face. All holes and ends shall be free from burrs and ends shall be cut square.

h. Tolerances.

(1) Tolerances on outside sizes:

Nominal Outside Dimensions	Outside Tolerances at All Sides at Corners
1 1/2" x 1 1/2"	±.006"
2" x 2"	±.008"
2 1/4" x 2 1/4"	±.010"
2 1/2" x 2 1/2"	±.010"
2 3/16" x 2 3/16"	±.010"

Note: Measurements from outside dimensions shall be made at least 2 inches from the end of the tube.

(2) Wall Thickness Tolerances. Permissible variation in wall thickness is +.011 ” - .008.”

(3) Convexity and Concavity. Measured in the center of the flat sides, tolerance in ±.010,” determined at the corner.

(4) Squareness of Sides and Twist.

Nominal Outside Dimensions	Squareness Tolerance	Twist Permissible in 3' Length
1 1/2" x 1 1/2"	±.009"	.050"
2" x 2"	±.012"	.062"
2 1/4" x 2 1/4"	±.014"	.062"
2 1/2" x 2 1/2"	±.015"	.075"
2 3/16" x 2 3/16"	±.014"	.062"

Note: A sample shall be considered to fail if its sides are not 90° to each other within the squareness tolerance listed above.

(5) Straight Tolerance. Permissible variation in straightness is 1/6 of an inch in 3 feet.

(6) Corner Radii. Standard outside corner radius shall be 5/32 of an inch ±1/64 inch.

i. Installation. The square end of the post shall not be modified or pointed, but shall be capable of being driven into the ground with the use of an approved driving cap.

j. Slip Base Assembly. The design and the construction of the slip base assembly shall be as shown on the Plans. The assembly shall be as manufactured by Unistrut Corporation or equal. The manufacturer shall certify that the chemistry, geometry, and mechanical properties are the

same as those used in the tests and that the assembly will meet FHWA change-in-volocity requirements.

5. **Flange Channel and Accessories.** Flange channel shall be of the size and shape specified and shall meet the following requirements:

   a. **Anchor Plates.** The flange channel and anchor plates shall be rolled from High Strength, Hot-Rolled Steel conforming to ASTM A499, Grade 60, 60,000 psi minimum yield strength and 90,000 psi minimum ultimate strength.

   b. **Safety Retainer-Spacer Strap.** The straps shall be of the size and shape specified and shall be fabricated from steel meeting AISI 1020.

   c. **Nuts and Bolts.** The bolts shall be the size specified and shall be fabricated from steel meeting ASTM A354, Grade BD, case hardened. The nuts shall meet AASHTO M291, Grade DH, and lockwashers shall be heavy-duty external type. Nuts and bolts shall be cadmium plated ASTM A165, Type 05, except when using clear chromate.

   d. **Fabrication.** The finished post shall be machine straightened and have a uniform finish, free from defects affecting its strength, durability, or appearance. All holes and sheared ends shall be commercially free from burrs.

      Sign posts and stringers shall be punched on the center line with 7/16-inch diameter holes on 1-inch centers for the entire length.

      Base posts shall be punched on centerline with a minimum of twelve 7/16-inch diameter holes on 1-inch centers. The first hole shall be 1 inch from the top. The bottom of the post shall be pointed for easy installation.

      The sign post, base posts, retainer-spacer, and anchor plates shall be galvanized according to AASHTO M232.

6. **Structural Steel Posts.** Structural steel posts shall be fabricated from material conforming to Section 834.01A and shall be galvanized according to Section 854 after fabrication.

1212-10 DELINEATORS

A. Posts. Steel posts shall meet ASTM A702.

Steel posts shall be galvanized according to AASHTO M111 or be aluminum posts fabricated from aluminum alloy meeting ASTM B308, Alloy 6061-T6. Posts shall have holes at 1-inch spacing the entire length of the post.

B. Reflectors.

1. **Reflective Sheeting.** Type III reflective sheeting for delineators shall be white or yellow adhesive coated, permanently adhered to aluminum or galvanized steel.

   The reflective sheeting shall meet Section 1212-2. Backing material shall meet Section 1212-1.

   The finished reflector shall show careful workmanship; be free of burrs, scratches, or damaged reflective sheeting; and have essentially a flat surface.

2. **Acrylic Plastic.**

   a. **Metal Parts.** The housing shall be .020-inch ASTM B209 3003-H14 or 5052-0 sheet aluminum formed to approximately 3 1/4 inches in diameter and .235 inch in depth to retain the acrylic reflector. The housing shall be provided with 4 embossed circular reinforcement ribs and marked with the manufacturer's name and part number.

      An aluminum grommet with a 3/16-inch inside diameter shall be expanded within the reflector mounting hole.

   b. **Acrylic Plastic.** The reflector shall be an acrylic plastic manufactured from methyl methacrylate. The reflector shall consist of a clear and transparent plastic face, with a minimum of 7 square inches of reflective area, referred to as the lens. It shall have a heat sealable plastic coated metallic foil back fused to the lens under heat and pressure around the entire perimeter of the lens and the central mounting hole to form a unit permanently sealed against dust, water, and water vapor. The reflector shall be colorless, yellow, or red.

      The lens shall consist of a smooth front surface free from projection or indentation other than the central mounting hole and identification with a rear surface bearing a prismatic configuration such that it will provide total internal reflection of light.

   c. **Optical Requirements**. The optical requirements shall be as follows:

Color	**Candelas per Foot-Candle per Square Foot Divergence Angle, -01 Degrees Entrance Angle, Deg.**	
	0	20
Crystal or Silver	119	47
Yellow	71	28
Red	29	11

The reflex reflector to be tested shall be located 100 feet from a single light source having an effective diameter of 2 inches; the light source shall be operated at approximately normal efficiency. The return light from the reflector shall be measured by a photoelectric photometer having a minimum sensitivity of 1×10^{-7} foot candles per mm scale division. The photometer shall have a receiver aperture of 0.5 inch diameter, shielded to eliminate stray light. The distance from light source center to aperture center shall be 2.1 inches for 0.1° observation angle. During testing, the reflector shall be spun to average the orientation effect. If a test distance other than 100 feet is used, the source and aperture dimensions and the distance between source and aperture shall be modified in the same proportion as the test distance.

Failure to meet the specific intensity minimum shall constitute failure of the reflector being tested; failure of more than 2 reflectors out of 50 subjected to test shall constitute failure of the lot.

d. Durability. The durability tests shall be as follows:

(1) Seal Test. The following test shall be used to determine if a reflector is adequately sealed against dust and water.

Submerge 50 samples in a water bath at room temperature. Subject the submerged samples to a vacuum of 5 inches for 5 minutes, then examine them for water intake. Failure of more than 2% of the number tested shall be cause for rejection.

(2) Heat Resistance Test. Three reflectors shall be tested for 4 hours in a circulating air oven at 175° ± 5°F. The test specimens shall be placed in a horizontal position on a grid or perforated shelf permitting free air circulation. At the conclusion of the test, the samples shall be removed from the oven and permitted to cool in air to room temperature. The samples, after exposure to heat, shall show no significant change in shape and general appearance when compared with unexposed control standards. No failures will be permitted.

C. Fasteners. Aluminum tension pin fasteners shall be an aluminum alloy meeting ASTM B211 Alloy 2024-T4 or 6061-T6. The collar shall be aluminum alloy 509.1212-6 C meeting ASTM B211 Alloy 6061-T67 or 6061-T6. The fasteners shall conform to the Contract.

Steel tension pin fasteners shall be a medium carbon steel with a minimum shear strength of 70,000 psi and a minimum tensile strength of 67,500 psi. They shall be galvanized according to AASHTO M232 conforming to the Contract.

1212-11 SAMPLING AND TESTING

A. Base Metal. The CONTRACTOR shall furnish to the inspector a certification as specified in Section 801-1.

B. Solutions for Cleaning and Etching. The solutions used for cleaning and etching shall not vary more than 10% from the manufacturer's recommendation. In addition, all treatment tanks shall be charged with fresh chemicals at least once a year. Titration equipment shall be available for the inspector 's use to check the solution strengths.

C. Inspection. All material and finished signs are subject to inspection at the place of manufacture and shall be subject to final inspection at the time of erection. Test panels, 12 inches by 12 inches representative of any stage of production, shall be furnished upon the inspector's request. These panels shall be processed with the regular production run and witnessed by the inspector. All surfaces exposed to weathering shall be free of any defects that may impair the serviceability or detract from the general appearance or color matching of the sign. Signs with any defects or damage that would affect their appearance or serviceability will not be accepted. No repairs shall be made to the face sheet without the approval of the inspector. Signs not conforming in all respects to the requirements will be rejected.

D. Reflective Sheeting. The reflective sheeting shall be certified by the manufacturer that the minimum brightness values previously listed for each color, have been met. The color of each type shall be checked by the inspector using the standard color charts as specified.

1. **Reflective Sheeting Flexibility.** The CONTRACTOR shall furnish test specimens for each color of reflective sheeting according to AASHTO M268. Type III and Type IV reflective sheeting shall be applied to a plate as specified in AASHTO M268 and shall be furnished for each color. These test specimens shall be processed with the regular production run and witnessed by the inspector.

2. **Inspection.** The reflective sheeting packages shall be inspected before installation on sign backings. The CONTRACTOR shall provide access by the inspector and shall indicate the roll packages or flat packages to be used on a particular Project. The inspector will mark the roll of flat material and note the manufacturer's date. All material used on that Project shall be used within one year of this date. If this date is past on the date of inspection, the roll shall be rejected.

E. Torque Control Nuts. The CONTRACTOR shall furnish to the inspector a certification if torque control nuts are chosen for use.

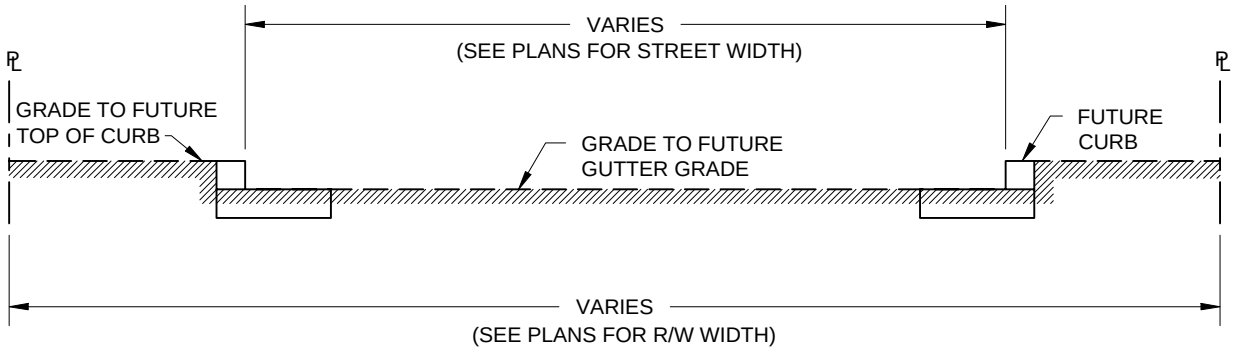

TYPICAL ROUGH GRADING SECTION

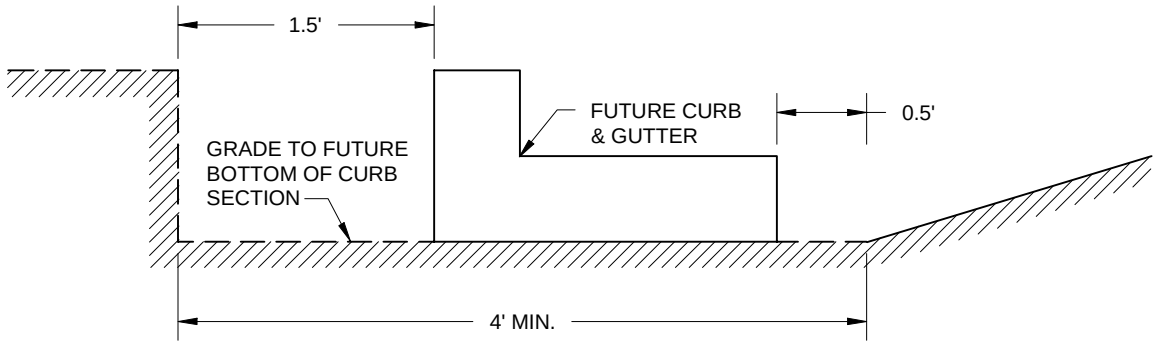

TYPICAL CURB GRADING SECTION

TYPICAL GRADING SECTIONS

Bismarck Engineering Department	Melvin J. Bullinger, P.E., City Engineer	SCALE: Not to Scale DATE: 1/2003	STANDARD DETAIL NO. 200-1

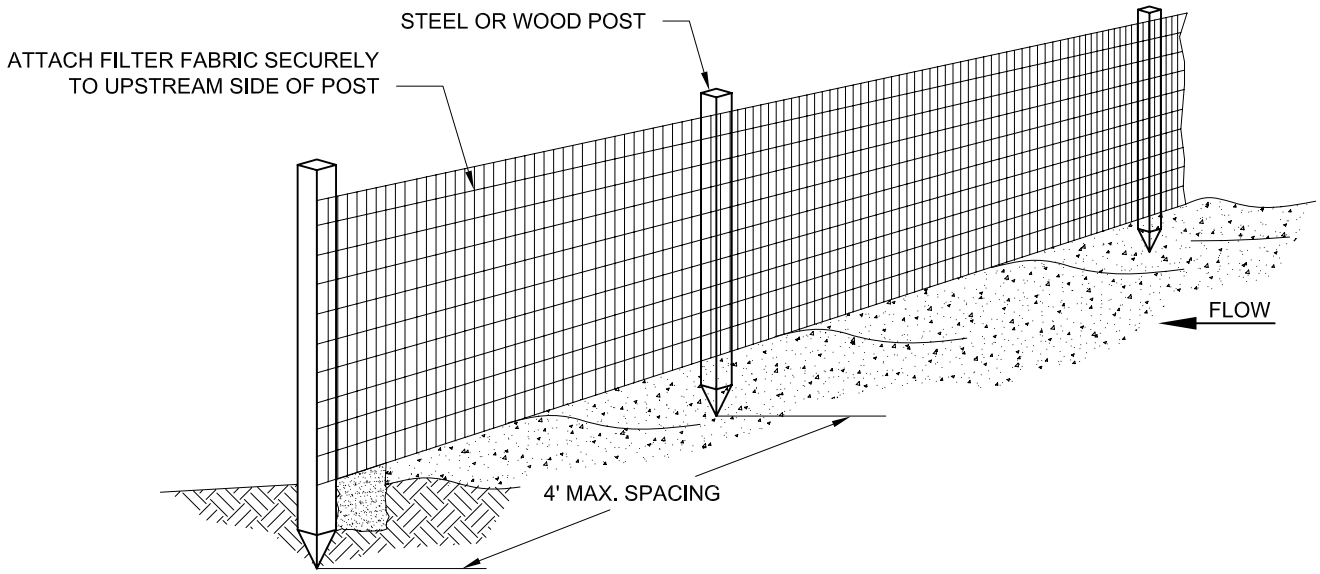

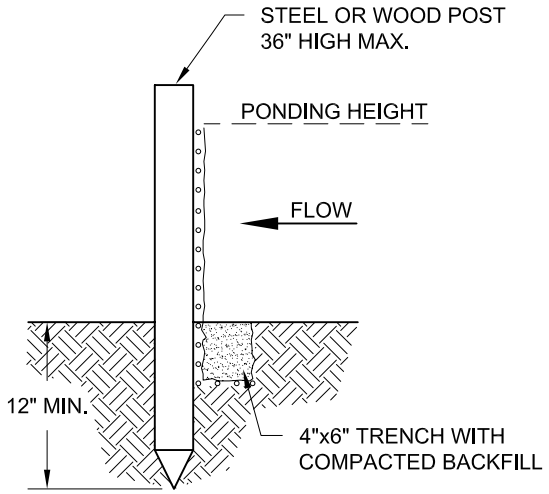

TRENCH DETAIL

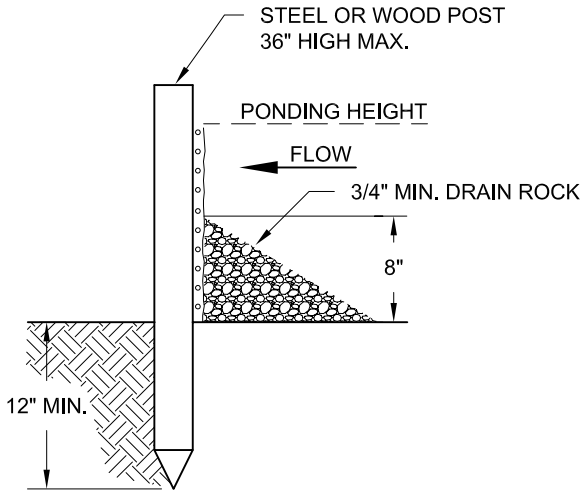

INSTALLATION WITHOUT TRENCH

1. SILT FENCE SHALL BE PLACED ON SLOPE CONTOURS TO MAXIMIZE PONDING EFFICIENCY.
2. INSPECT AND REPAIR FENCE AFTER EACH STORM EVENT AND REMOVE SEDIMENT WHEN NECESSARY.
3. REMOVED SEDIMENT SHALL BE DEPOSITED TO AN AREA THAT WILL NOT CONTRIBUTE SEDIMENT OFF-SITE AND CAN BE PERMANENTLY STABILIZED.

SILT FENCE

Bismarck Engineering Department	Melvin J. Bullinger, P.E., City Engineer	SCALE: Not to Scale DATE: 4/2007	STANDARD DETAIL NO. 200-2

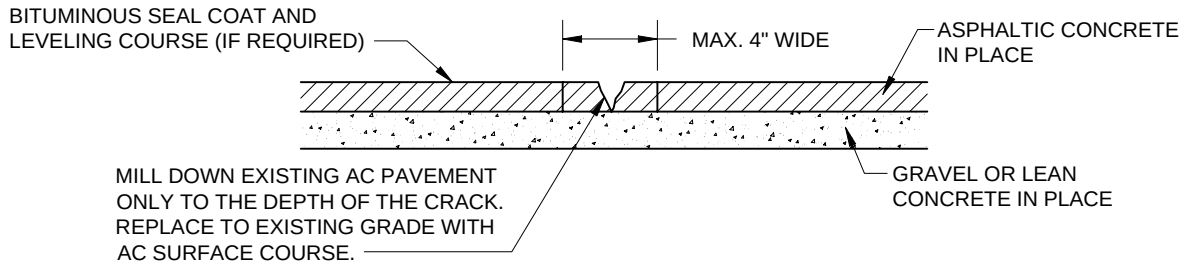

TYPICAL JOINT FAILURE REPAIR

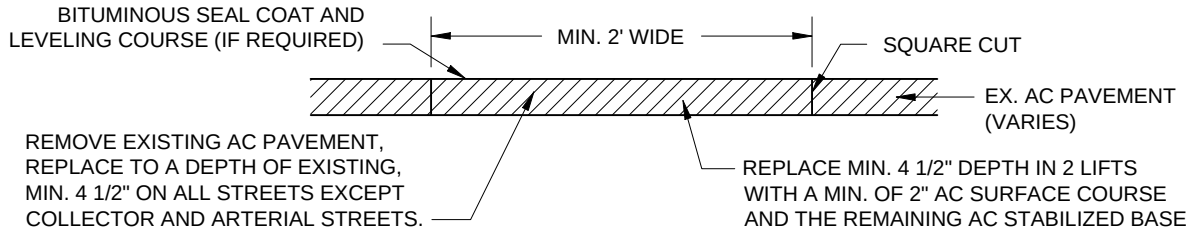

AC PAVEMENT FAILURE

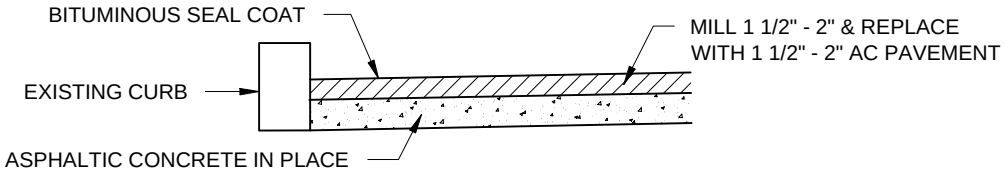

TYPICAL MILL & OVERLAY DETAIL

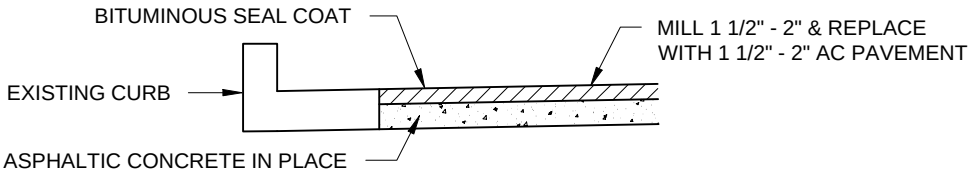

TYPICAL MILL & OVERLAY DETAIL

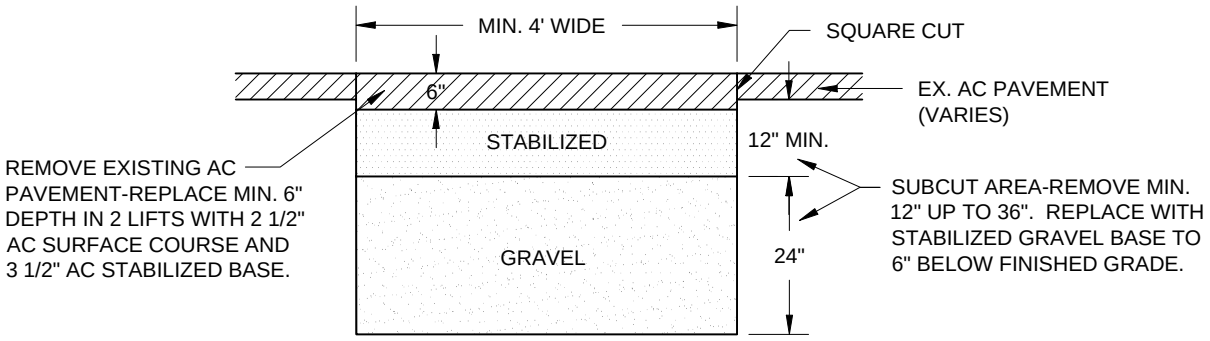

SUB-BASE FAILURE

AC PATCH

Bismarck *Engineering Department*	Melvin J. Bullinger, P.E., City Engineer	SCALE: Not to Scale DATE: 1/2003	STANDARD DETAIL NO. **400-1**

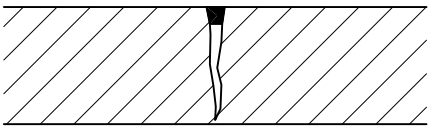

(A) FLUSH-FILL

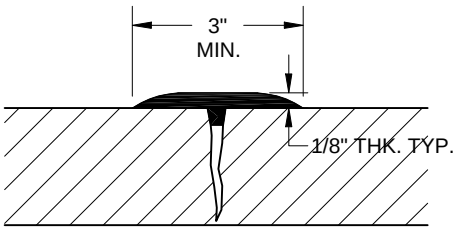

(B) SIMPLE OVERBAND

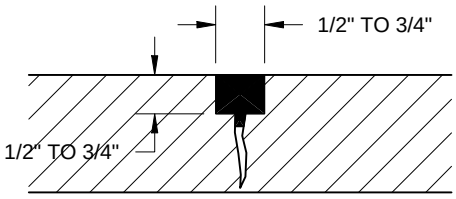

(C) STANDARD RESERVOIR-AND-FLUSH

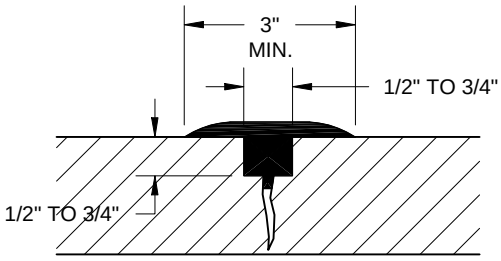

(D) STANDARD RECESSED OVERBAND

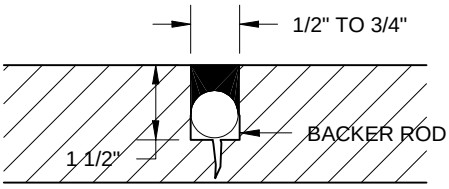

(E) DEEP RESERVOIR-AND-FLUSH
(backer rod)

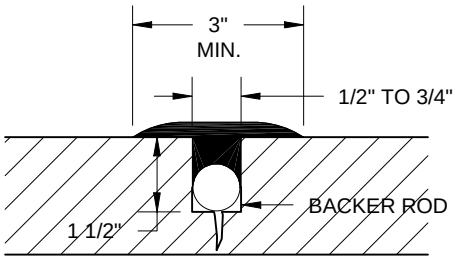

(F) DEEP RECESSED OVERBAND
(backer rod)

CRACK SEAL

Bismarck *Engineering Department*	Melvin J. Bullinger, P.E., City Engineer	SCALE: Not to Scale DATE: 1/2003	STANDARD DETAIL NO. **400-2**

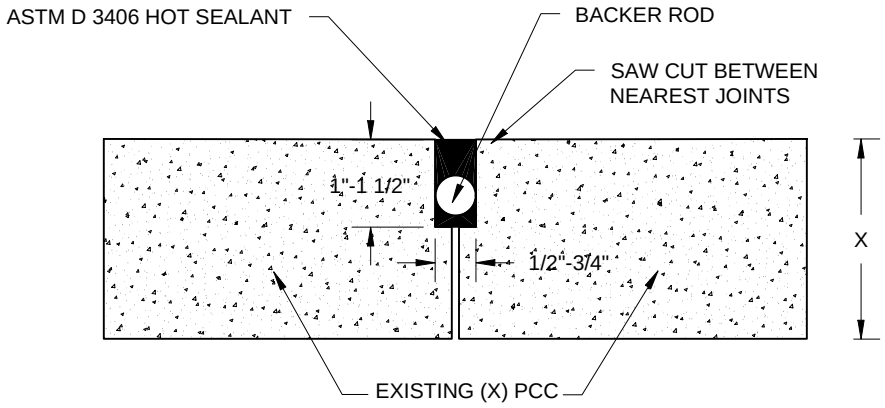

SAW AND SEAL

(Random Crack > 1/2" Width)

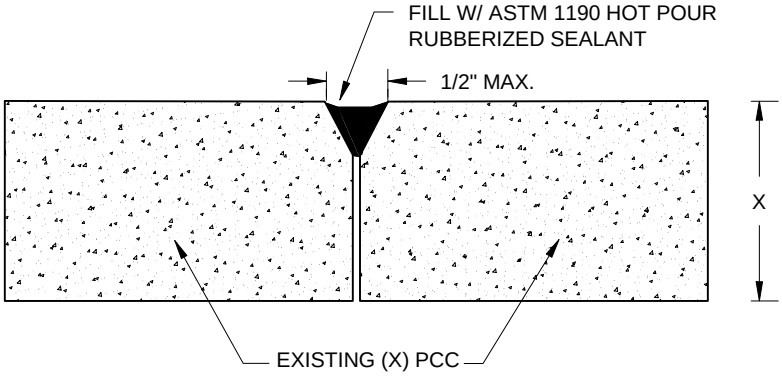

JOINT AND RANDOM CRACK

(1/2" Wide or Less)

METHOD REQUIRED WILL BE MARKED BY THE ENGINEER

CONCRETE JOINTS

Bismarck Engineering Department	Melvin J. Bullinger, P.E., City Engineer	SCALE: Not to Scale DATE: 1/2003	STANDARD DETAIL NO. 500-1

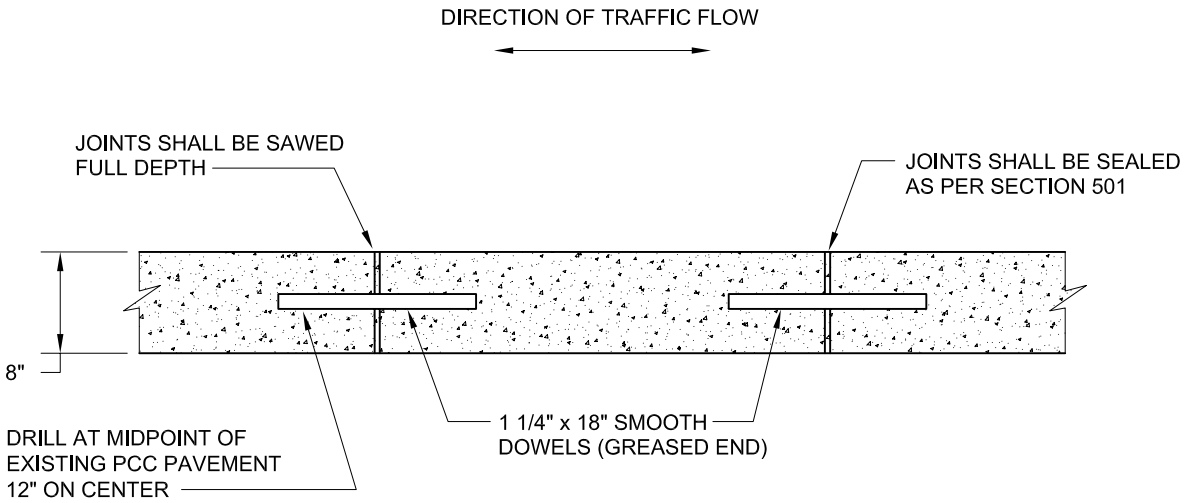

LONGITUDINAL BARS SHALL BE #6 x 18"
DEFORMED BARS @ 2' ON CENTER

FULL DEPTH SLAB REPAIR

Bismarck Engineering Department	Melvin J. Bullinger, P.E., City Engineer	SCALE: Not to Scale DATE: 4/2007	STANDARD DETAIL NO. **500-2**

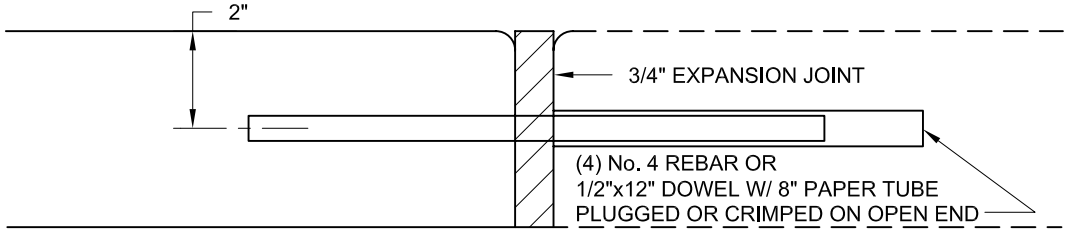

END OF SIDEWALK RUN OR AT EXPANSION JOINT, APPROXIMATELY 100' INTERVALS

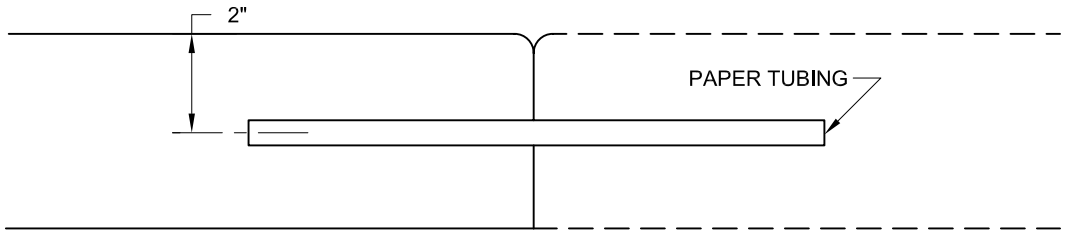

TEMP. END OF WORK NOT ENDING AT AN EXPANSION JOINT

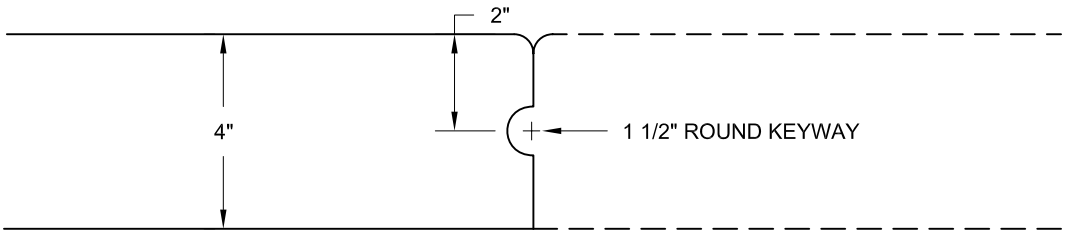

TEMP. END OF WORK NOT ENDING AT AN EXPANSION JOINT

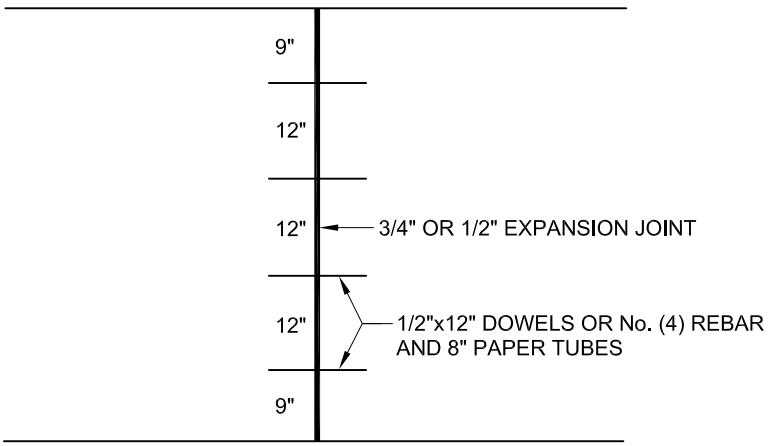

TYPICAL 4.5' WIDE SIDEWALK AT LOT LINES, CROSSWALKS OR 100' INTERVALS

STANDARD CONCRETE SIDEWALK

Bismarck Engineering Department	Melvin J. Bullinger, P.E., City Engineer	SCALE: Not to Scale DATE: 4/2007	STANDARD DETAIL NO. 600-1

NOTE NO. 1 CONTRACTION JOINT SCORED 1" DEEP

NOTE NO. 2 LONGITUDINAL CONTRACTION JOINTS SHALL BE SPACED EQUIDISTANT, WITH 7' MAX. SPACING, SCORED 1/2 DEPTH OF CONCRETE.

NOTE NO. 3 SIGN & FLAG POLE HOLDERS, WHERE DESIGNATED BY THE ENGINEER, SHALL BE PLACED 2' BEHIND THE FACE OF THE CURB. ALL GATE VALVES, CURB STOP BOXES, HYDRANTS, TRAFFIC CONTROL FOUNDATIONS AND SIGN POSTS SHALL BE WRAPPED WITH APPROVED EXPANSION JOINT.

NOTE NO. 4 EXPANSION JOINTS AT THE BACK OF CURB AT EXISTING STRUCTURES OR BUILDINGS SHALL BE SEALED.

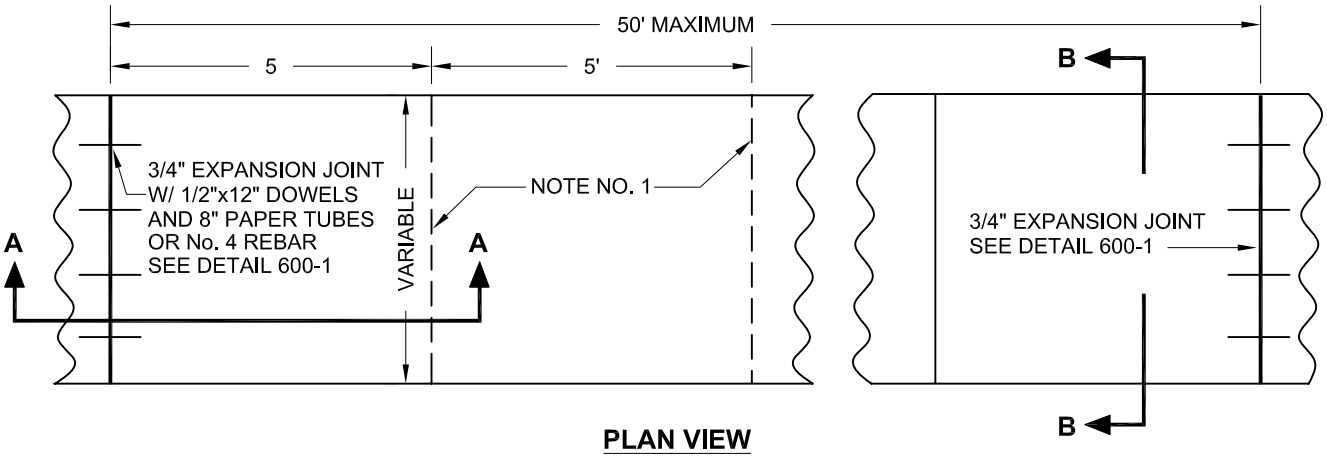

PLAN VIEW

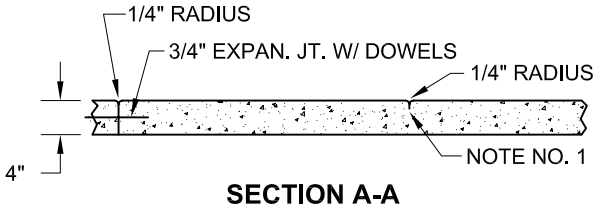

SECTION A-A

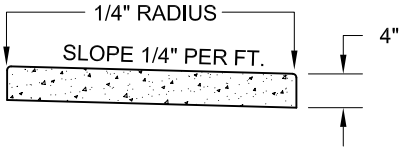

SECTION B-B

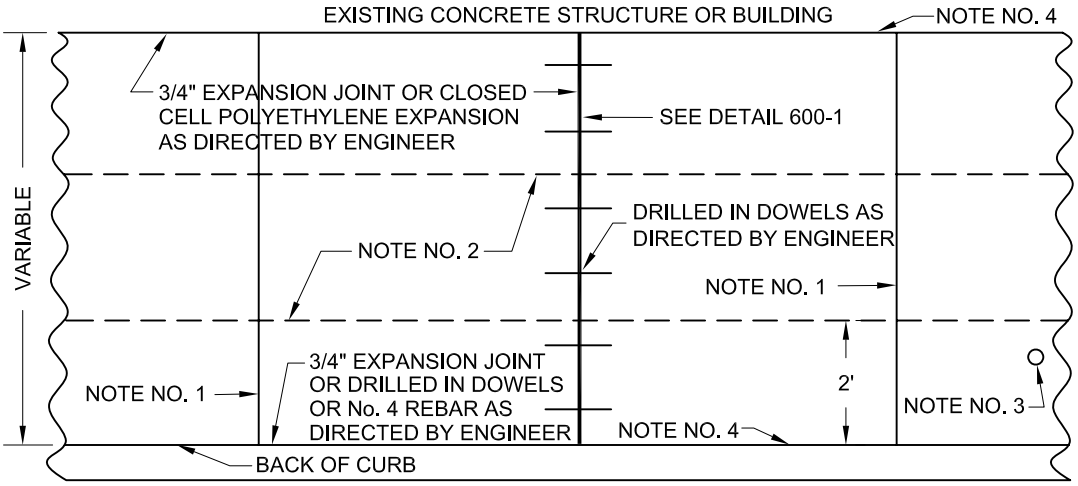

COMMERCIAL SIDEWALK
PLAN VIEW

COMMERCIAL CONCRETE SIDEWALK

Bismarck Engineering Department	Melvin J. Bullinger, P.E., City Engineer	SCALE: Not to Scale DATE: 4/2007	STANDARD DETAIL NO. 600-2

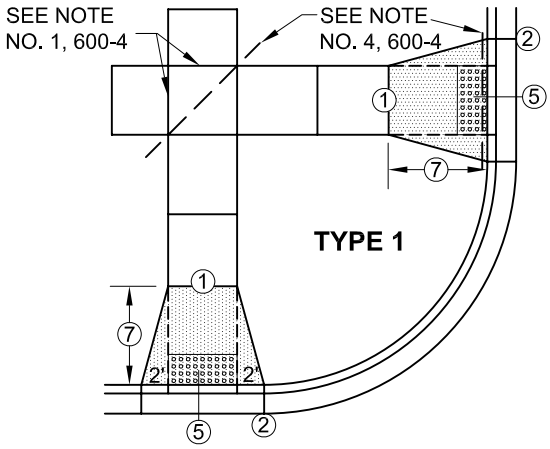

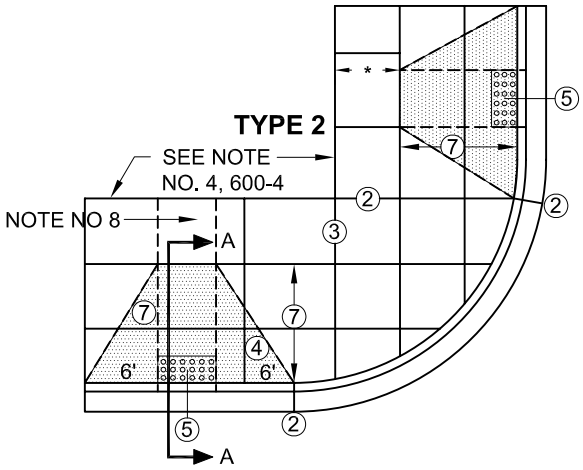

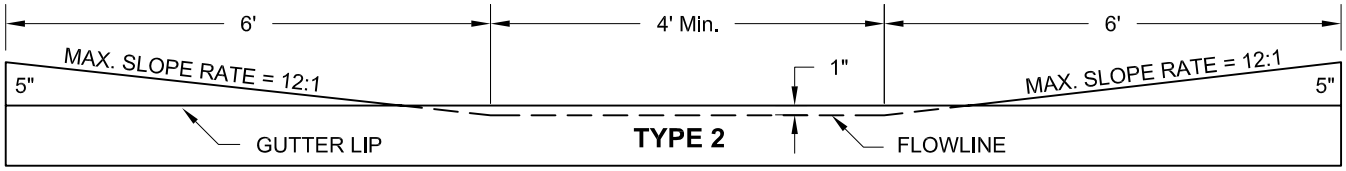

FLARED SIDES OF CURB RAMP

(IF LANDING IS LESS THAN 4', SIDE FLARE SHALL NOT EXCEED 12:1 SLOPE, UNLESS APPROVED)

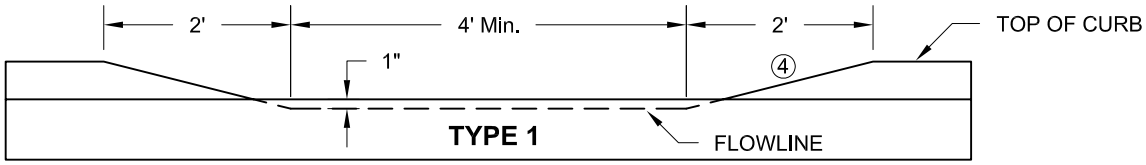

FLARED SIDES OF CURB RAMP

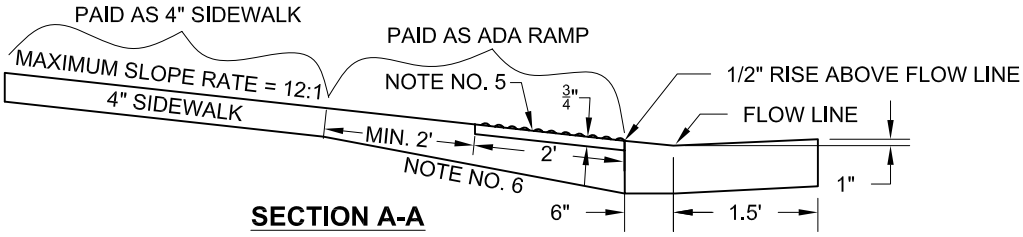

SECTION A-A

NOTE NO.① RAMPS TO BE BUILT WHERE CROSSWALKS EXIST SHALL BE DOWELED INTO EXISTING SIDEWALK, USING 3/4" EXPANSION JOINT, AS DETERMINED BY THE ENGINEER.

NOTE NO.② THIS JOINT MAY BE A SCORED JOINT, DRILLED AND DOWELLED OR 3/4" EXPANSION JOINT WITH 3/4"x24" SMOOTH DOWELS. AS DETERMINED BY THE ENGINEER IN THE FIELD.

NOTE NO.③ RAMPS TO BE BUILT WHERE FULL CROSSWALKS EXIST SHALL BE REMOVED TO THE NEAREST EXPANSION OR CONTRACTION JOINT. THE ENGINEER WILL DETERMINE WHAT TYPE OF JOINT TO REPLACE.

NOTE NO.④ SIDE FLARE SLOPE MAY VARY DUE TO HEIGHT OF CURB.

NOTE NO.⑤ 2' DETECTABLE WARNING PANEL.

NOTE NO.⑥ BOTTOM OF LANDING STRIP TO BE 6" THICK TAPERED TO 4" THICK MIN. OF 4' UP THE RAMP.

NOTE NO.⑦ LENGTH OF RAMP SHALL BE DETERMINED BY THE ENGINEER.

NOTE NO.⑧ WHEN A MIN. OF A 4' LANDING IS NOT AVAILABLE, THE MAXIMUM RUNNING SLOPE OF THE SIDEWALK SHALL BE 12:1 (15' LONG MAXIMUM ALLOWED FOR STEEPER STREET/CURB GRADES AS APPROVED.)

TYPE 1 & 2 CURB RAMPS

Bismarck Engineering Department	Melvin J. Bullinger, P.E., City Engineer	SCALE: Not to Scale DATE: 4/2007	STANDARD DETAIL NO. 600-3

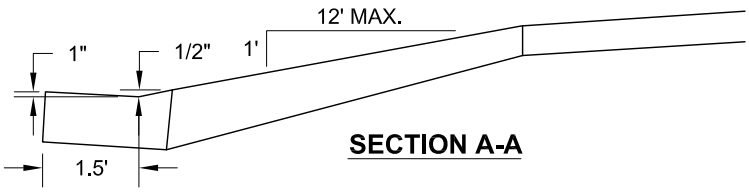

SECTION A-A

NOTE NO. 1
3/4" EXPANSION JOINT W/ 1/2" x12" DOWELS AND 8" PAPER TUBES, OR #4 REINFORCING STEEL

NOTE NO. 2
3/4" EXPANSION JOINTS AND DOWELS FOR FULL SIDEWALK ONLY, AS DIRECTED BY ENGINEER.

NOTE NO. 3
RESIDENTIAL INTERSECTIONS SHALL USE 4.5' WALK AND RAMP SET 1.5' FROM PROPERTY LINE, UNLESS MOUNTABLE CURBS OR 6' SIDEWALK IS USED.

NOTE NO. 4
2" P.V.C. CONDUIT TO BE INSTALLED AS DIRECTED BY THE ENGINEER. THE CONCRETE SHALL BE STAMPED WITH THE LETTER "C" OVER THE CONDUIT.

NOTE NO. 5
DETECTABLE WARNING PANEL. MIN. 2'x4'
PLACEMENT OF DETECTION PANELS SHALL BE DETERMINED BY ENGINEER ON ANY RADIUS 16' OR LARGER.

NOTE NO. 6
INSTALL STEEL FENCE POSTS IN ACCORDANCE WITH SEC. 1205-3.9 WHEN DIRECTED.

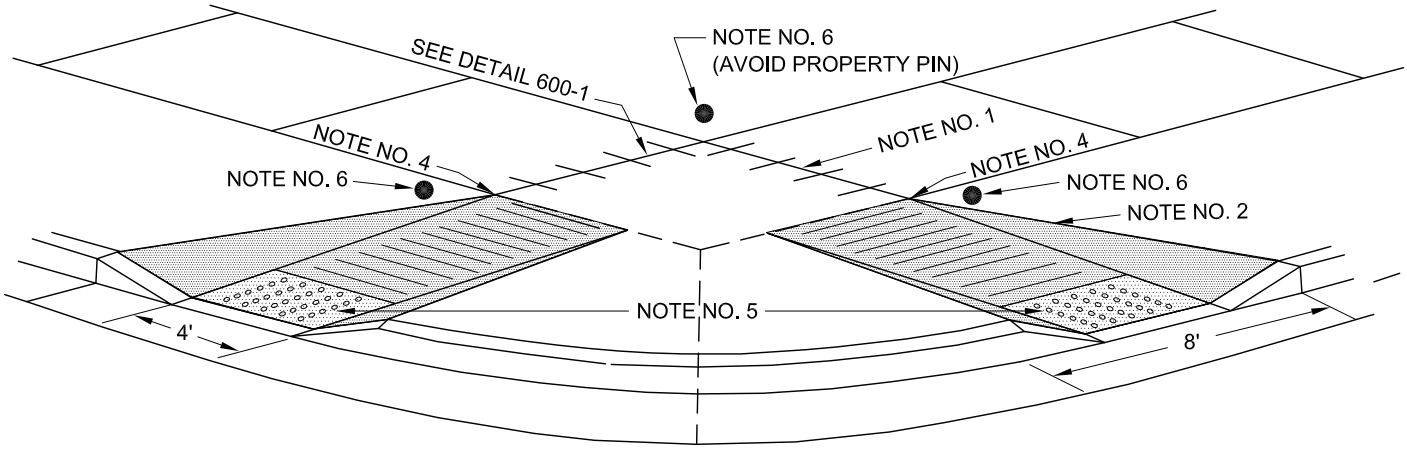

PERSPECTIVE VIEW OF COMMERCIAL & RESIDENTIAL RAMP

RESIDENTIAL CURB RAMPS

Bismarck Engineering Department	Melvin J. Bullinger, P.E., City Engineer	SCALE: Not to Scale DATE: 3/2012	STANDARD DETAIL NO. 600-4

1/4" BRASS BOLTS SHALL BE TAPPED INTO THE SUPPORT BRACES TO HOLD THE 1/4" STEEL SIDEWALK TRENCH LID DOWN. SUPPORT BRACES SHALL BE INSTALLED ONE AT EACH END AND 2' CENTER TO CENTER THEREAFTER.

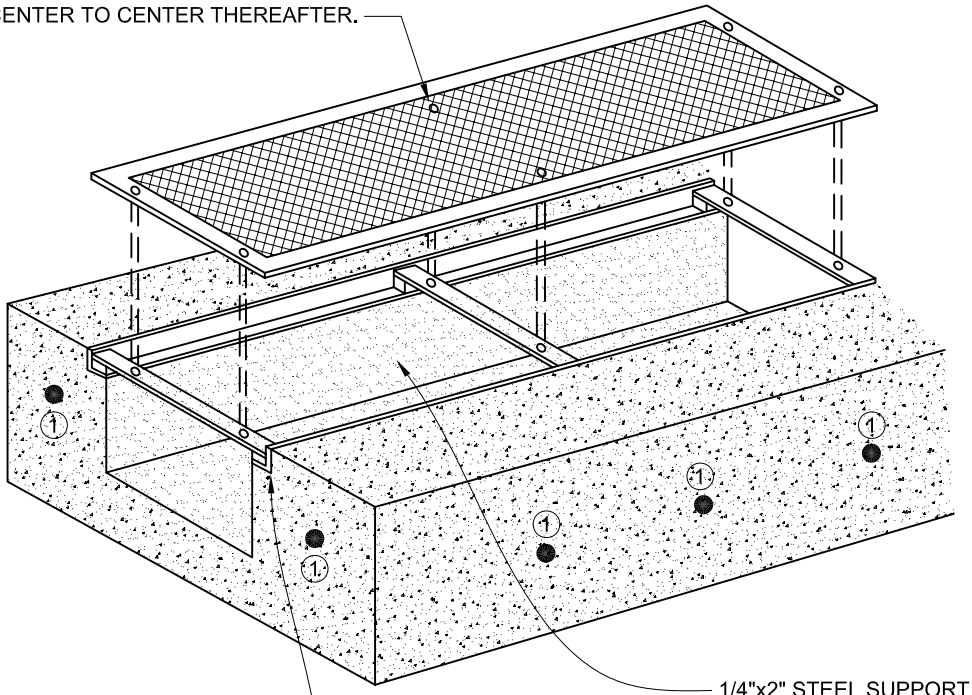

1/4"x2" STEEL SUPPORT BRACES WITH 1/2" STEEL SPACERS, ALL OF WHICH SHALL BE WELDED TO THE 1"x1" ANGLE IRON.

1"x1" ANGLE IRON WITH NO. 4 REBAR ANCHORS 3" LONG WELDED TO THE FRAME AT A 45° ANGLE DOWN. ANGLE IRON ANCHORS SHALL BE PLACED AT 18" CENTER TO CENTER.

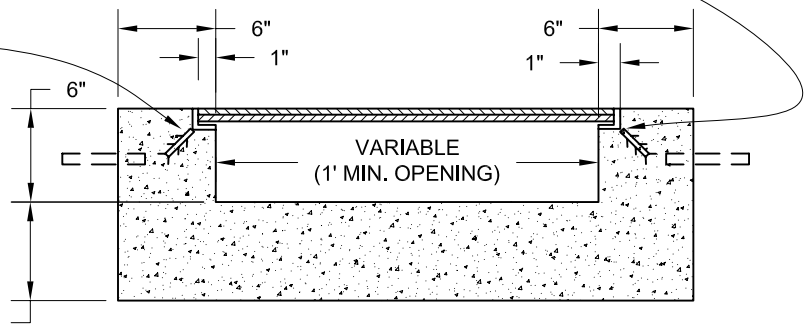

CONTRACTION JOINTS SHALL BE SCORED 1/3 THE DEPTH OF THE CONCRETE AT A MINIMUM SPACING OF 12'. ALL JOINTS IN THE GUTTER SHALL BE SEALED.

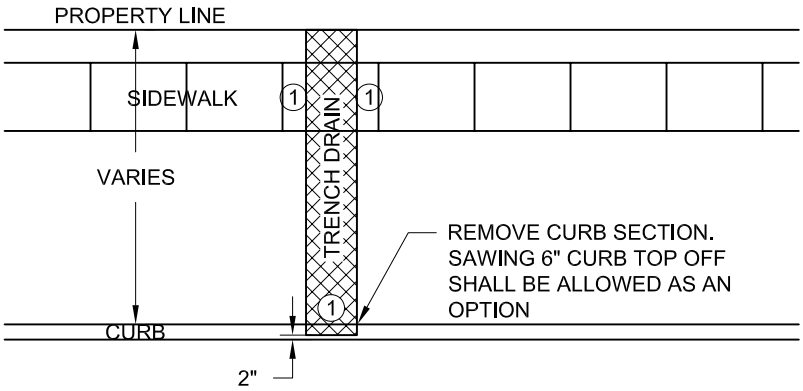

NOTE NO.1
INSTALL DRILLED IN DOWELS OR REINFORCING STEEL BARS AS DIRECTED BY ENGINEER.

TRENCH DRAINS SHALL BEGIN AT PROPERTY LINE OR PROPOSED BACK EDGE OF SIDEWALK AND SHALL EXTEND TO 2" FROM THE FACE OF THE CURB. ALL DRAINS MUST BE COMPLETELY COVERED INCLUDING THE BOULEVARD BETWEEN THE SIDEWALK AND THE CURB.

SIDEWALK TRENCH DRAIN

Bismarck Engineering Department	Melvin J. Bullinger, P.E., City Engineer	SCALE: Not to Scale DATE: 4/2007	STANDARD DETAIL NO. 600-5

NOTE NO. 1 CENTER JOINT TO BE USED ON ALL DRIVEWAYS 18' IN WIDTH OR LESS. JOINT SHALL BE A KEYED CONSTRUCTION OR CONTRACTION JOINT SCORED 1/3 THE DEPTH OF THE CONCRETE. JOINT SHALL BE SEALED. DRIVEWAYS 19' TO 30' IN TOP WIDTH SHALL BE DIVIDED INTO 3 PARTS. DRIVEWAYS 31' AND LARGER SHALL BE DIVIDED INTO 4 PARTS.

NOTE NO. 2 THIS SHALL BE A CONTRACTION JOINT SCORED 1/3 THE DEPTH OF THE CONCRETE. JOINT SHALL BE SEALED.

NOTE NO. 3 WHEN THE DISTANCE IS 4.0' X = 2.0' WHEN THE DISTANCE IS 6.5' X = 3.0'
WHEN THE DISTANCE IS 8.0' X = 4.0' WHEN THE DISTANCE IS 9.5' OR OVER X = 5.0' TO 6.0' AS DIRECTED BY ENGINEER

NOTE NO. 4 THIS JOINT IS OPTIONAL WHEN POURED CONTINUOUS.

NOTE NO. 5 WHEN THE LENGTH IS 9.5' OR OVER, A HORIZONTAL CONTRACTION JOINT SHALL BE SCORED OR SAWED. JOINT SHALL BE SEALED.

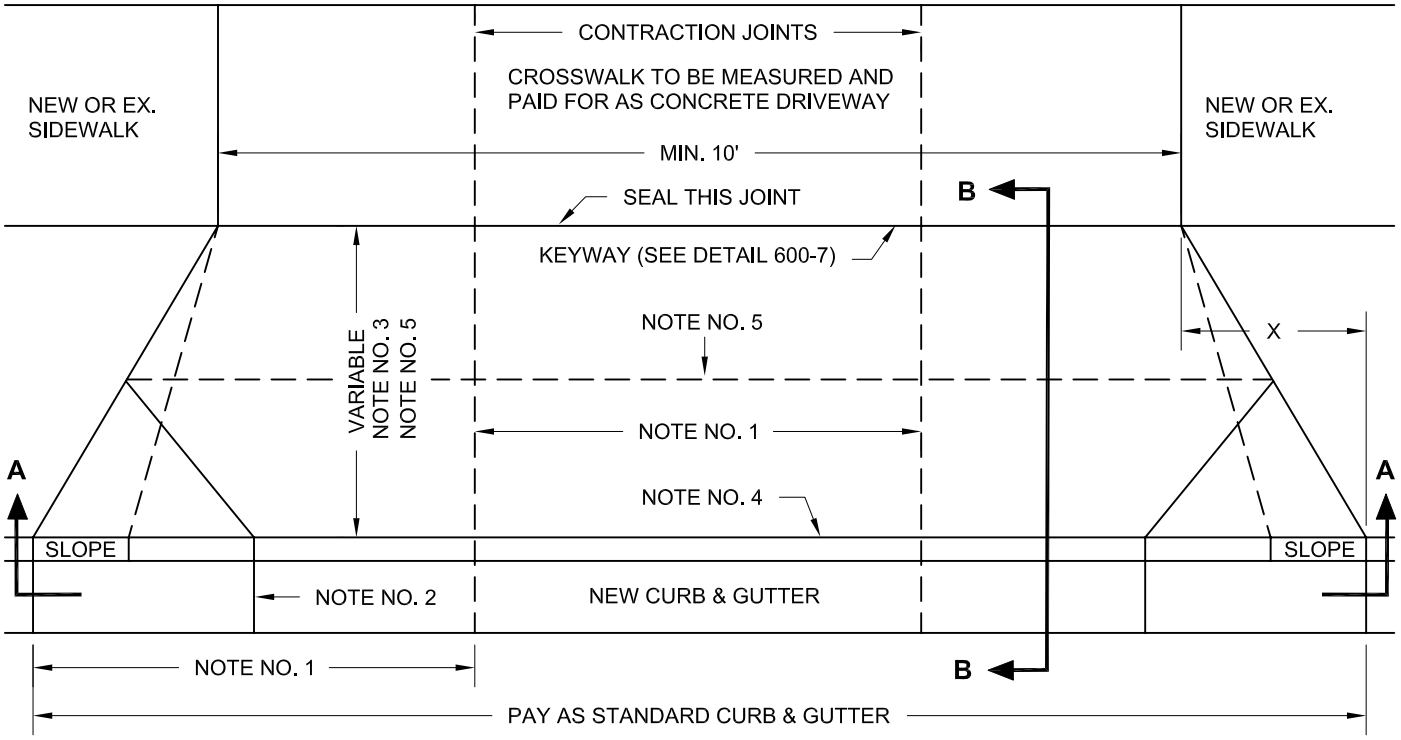

PLAN VIEW

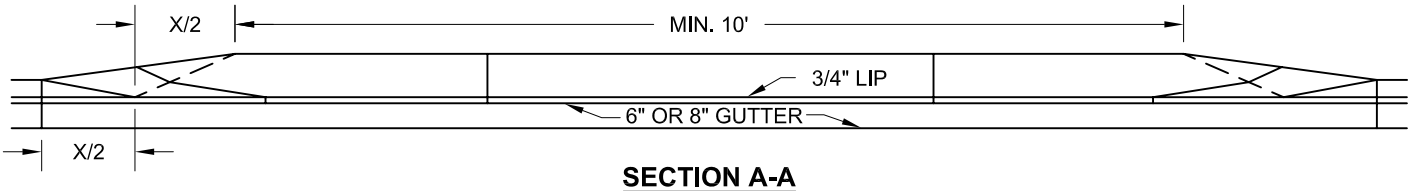

SECTION A-A

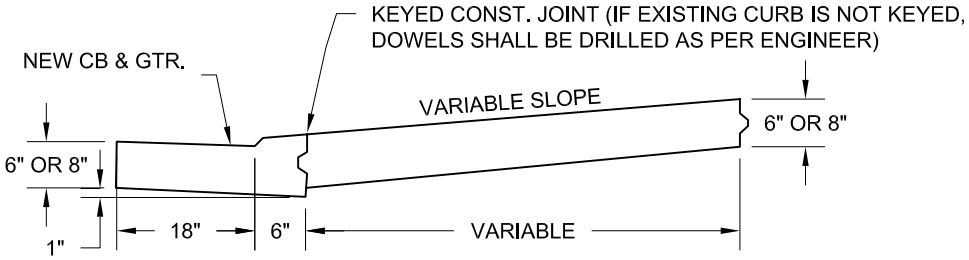

SECTION B-B

DROP CURB DRIVEWAY

Bismarck Engineering Department	Melvin J. Bullinger, P.E., City Engineer	SCALE: Not to Scale DATE: 4/2007	STANDARD DETAIL NO. 600-6

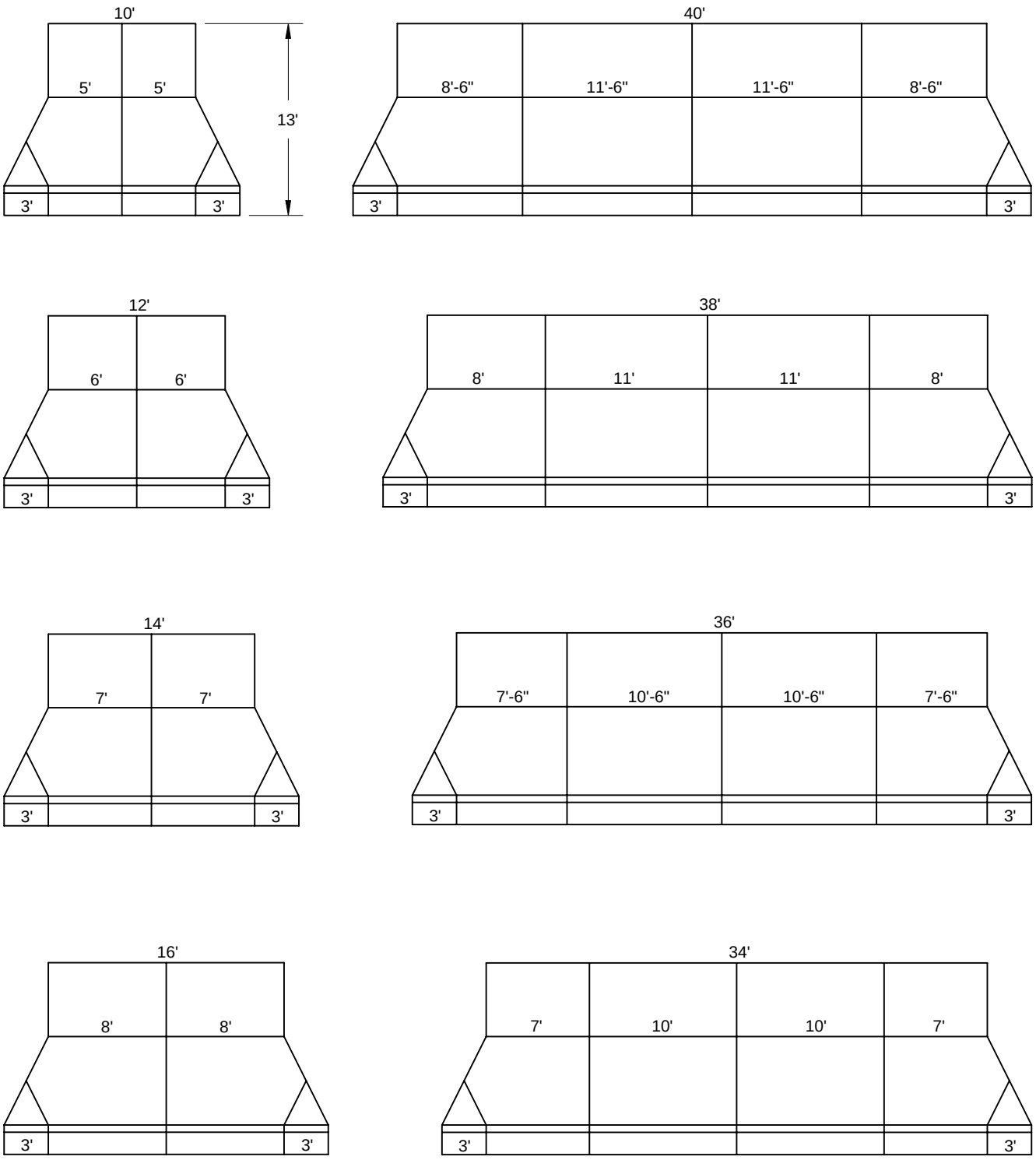

DIVIDING DRIVEWAYS (SHEET 1 OF 2)

Bismarck Engineering Department	Melvin J. Bullinger, P.E., City Engineer	SCALE: Not to Scale DATE: 1/2003	STANDARD DETAIL NO. **600-7**

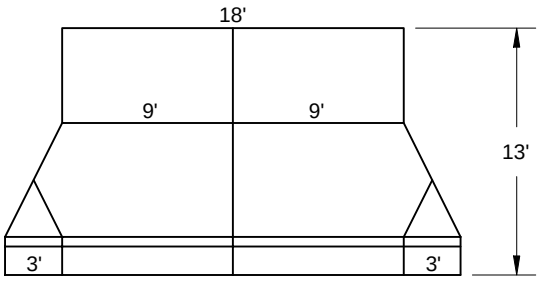

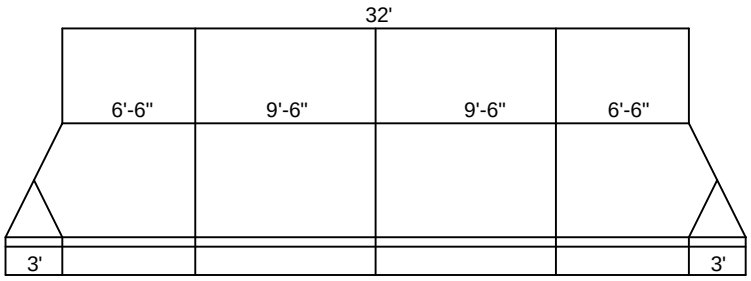

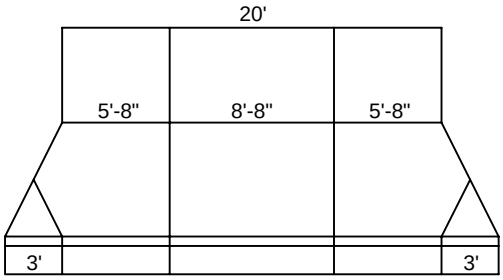

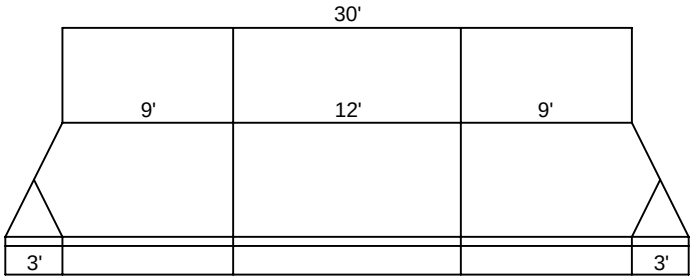

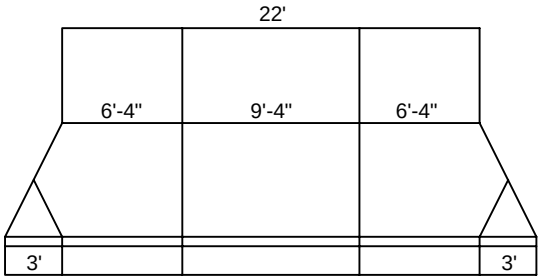

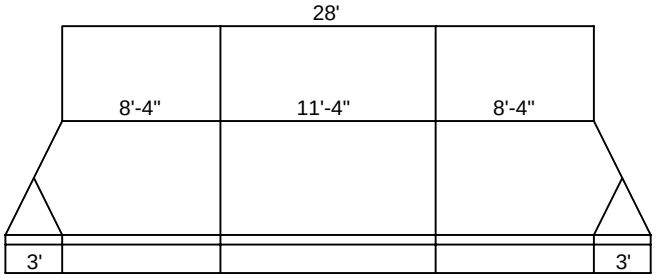

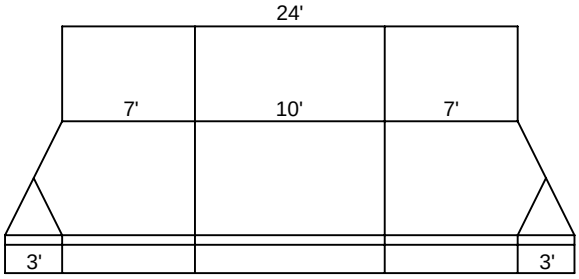

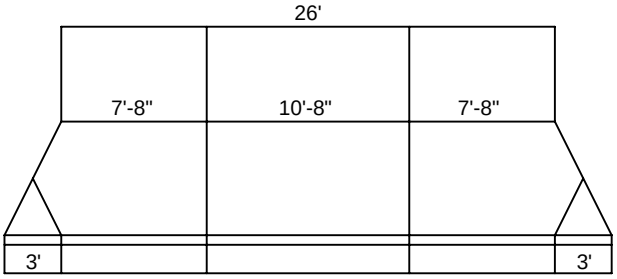

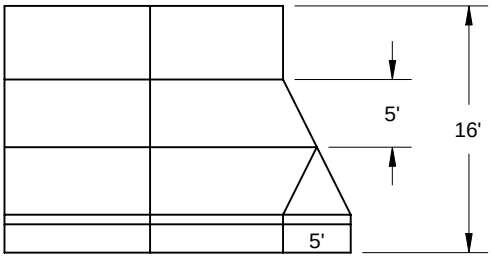

DIVIDING DRIVEWAYS (SHEET 2 OF 2)

Bismarck Engineering Department	Melvin J. Bullinger, P.E., City Engineer	SCALE: Not to Scale DATE: 1/2003	STANDARD DETAIL NO. **600-8**

NOTE NO. 1 (2) 1/2"x12" DOWELS, OR (3) NO. 4 REINFORCING STEEL SHALL BE DRILLED IN WITH A 5/8" BIT ON EITHER END OF THE DRIVEWAY AS DIRECTED BY THE ENGINEER.

NOTE NO. 2 CENTER JOINT TO BE USED ON ALL DRIVEWAYS 23' IN WIDTH OR LESS. JOINT SHALL BE A KEYED CONSTRUCTION JOINT OR CONTRACTION JOINT SCORED, 1/3 THE DEPTH OF THE CONCRETE. JOINT SHALL BE SEALED. DRIVEWAYS 24' TO 33' IN TOP WIDTH SHALL BE DIVIDED INTO 3 PARTS, DRIVEWAYS 34' AND LARGER SHALL BE DIVIDED INTO 4 PARTS. WHEN THE DISTANCE IS 9.5' OR OVER, A HORIZONTAL CONTRACTION JOINT SHALL BE SCORED OR SAWED. JOINT SHALL BE SEALED.

NOTE NO. 3 WHEN THE DISTANCE IS 4' OR OVER USE CONTRACTION JOINT DESCRIBED IN NOTE NO. 2.

NOTE NO. 4 DOWELS SHALL BE SUPPORTED BY AN APPROVED SUPPORT MADE OF NO. 7 AWG WIRE.

NOTE NO. 5 JOINT SHALL BE A CONTRACTION JOINT WITH CURB CUT FULL DEPTH AND THE REMAINER OF THE JOINT CUT 1/3 THE DEPTH OF THE CONCRETE. JOINT SHALL BE SEALED.

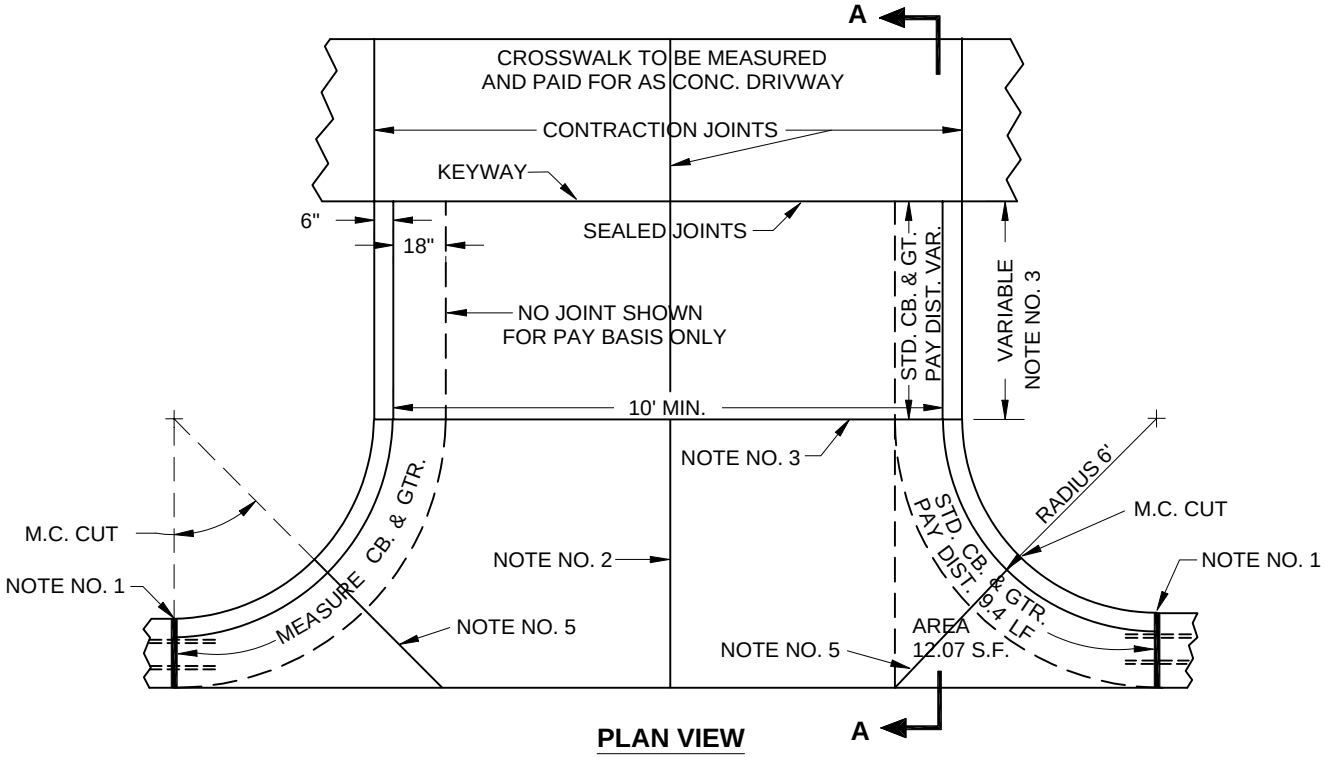

PLAN VIEW

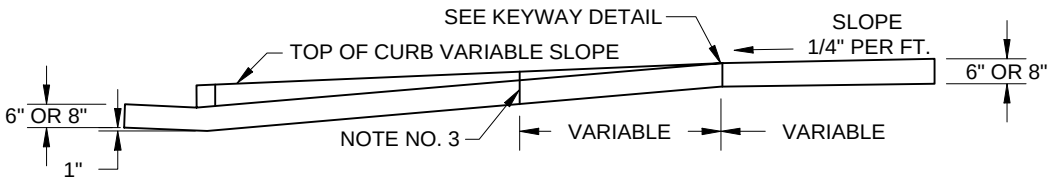

SECTION A-A

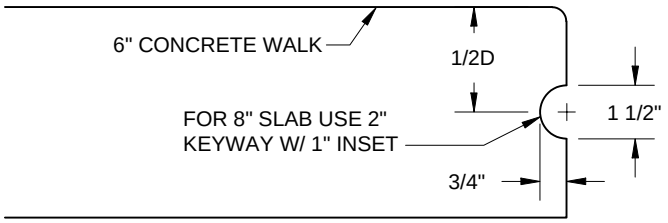

KEYWAY DETAIL

RADIUS DRIVEWAY

Bismarck Engineering Department	Melvin J. Bullinger, P.E., City Engineer	SCALE: Not to Scale DATE: 1/2003	STANDARD DETAIL NO. 600-9

NOTE NO. 1 FOR 8" CONCRETE THIS SHALL BE A SCORED OR SAWED JOINT, A MINIMUM OF 1/3 THE DEPTH OF THE CONCRETE.

NOTE NO. 2 CENTER JOINT TO BE USED ON ALL DRIVEWAYS 23' IN WIDTH OR LESS. JOINT SHALL BE A KEYED CONSTRUCTION JOINT OR CONTRACTION JOINT SCORED, 1/3 THE DEPTH OF THE CONCRETE. JOINT SHALL BE SEALED. DRIVEWAYS 24' TO 33' IN TOP WIDTH SHALL BE DIVIDED INTO 3 PARTS. DRIVEWAYS 34' AND LARGER SHALL BE DIVIDED INTO 4 PARTS. WHEN THE LENGTH OF THE DRIVEWAY IS 9.5' OR GREATER, A HORIZONTAL CONTRACTION JOINT SHALL BE SCORED OR SAWED, JOINT SHALL BE SEALED.

NOTE NO. 3 THIS SHALL BE A CONTRACTION JOINT. CONTRACTION JOINT SHALL BE SCORED 1/3 THE DEPTH OF THE CONCRETE. ALL JOINTS SHALL BE SEALED. IF THIS IS A CUT-IN DRIVEWAY, (2) 1/2"x12" DOWELS OR (3) NO. 4 REINFORCING BARS SHALL BE DRILLED IN WITH A 5/8" BIT ON BOTH ENDS OF THE DRIVEWAY OR AS DIRECTED BY THE ENGINEER.

NOTE NO. 4 THIS KEYED CONSTRUCTION JOINT, WHEN SPECIFIED SHALL BE PAID FOR AS EXTRA WORK IN ACCORDANCE WITH SECTION 126 UNLESS SPECIFICALLY CALLED FOR IN THE SPECIAL PROVISIONS OR SHOWN ON THE PLANS.

NOTE NO. 5 DOWELS SHALL BE SUPPORTED BY AN APPROVED SUPPORT MADE OF NO. 7 AWG WIRE.

NOTE NO. 6 WHEN COMMERCIAL OR RESIDENTIAL DRIVEWAY DOES NOT HAVE A 4' LANDING, DRIVEWAY RUNNING SLOPE SHALL BE A MAXIMUM OF OF 12:1.

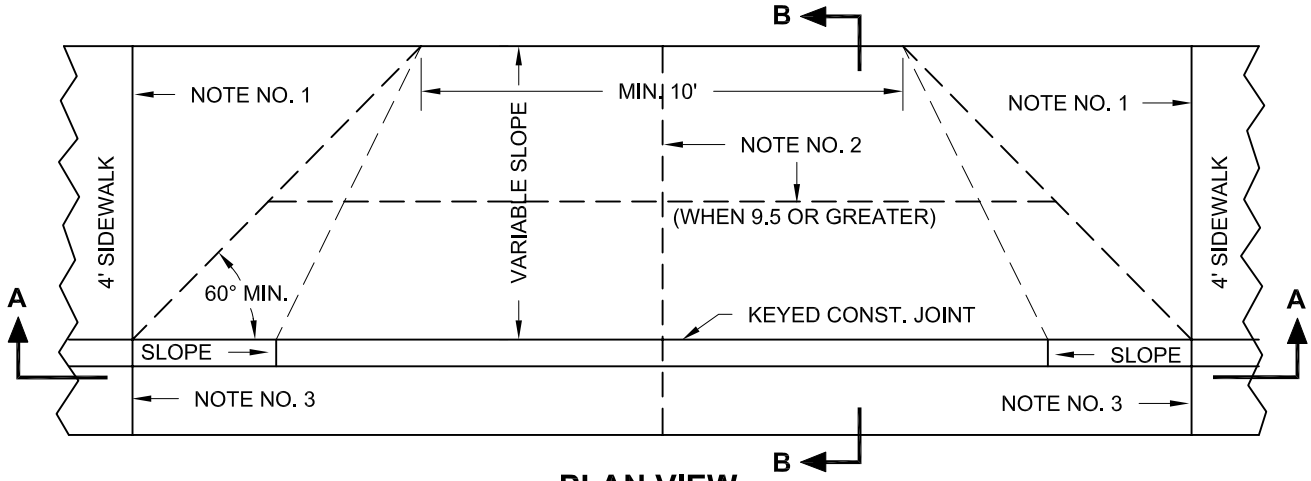

PLAN VIEW

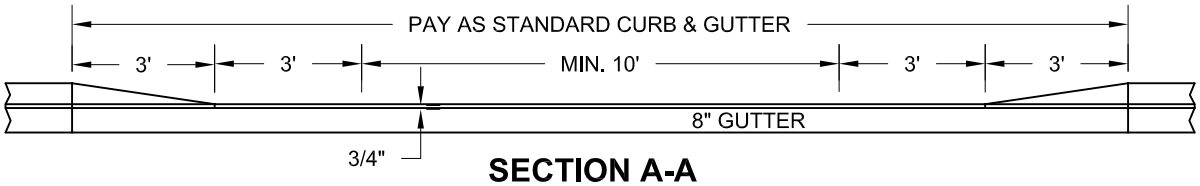

SECTION A-A

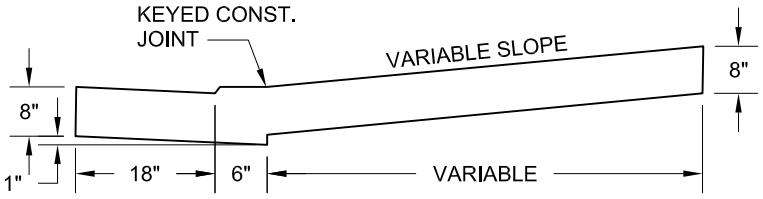

SECTION B-B

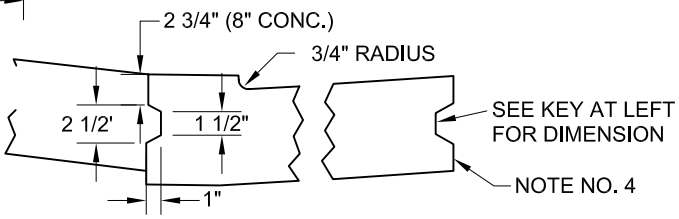

KEY JOINT DETAIL

COMMERCIAL DRIVEWAY

Bismarck Engineering Department	Melvin J. Bullinger, P.E., City Engineer	SCALE: Not to Scale DATE: 4/2007	STANDARD DETAIL NO. 600-10

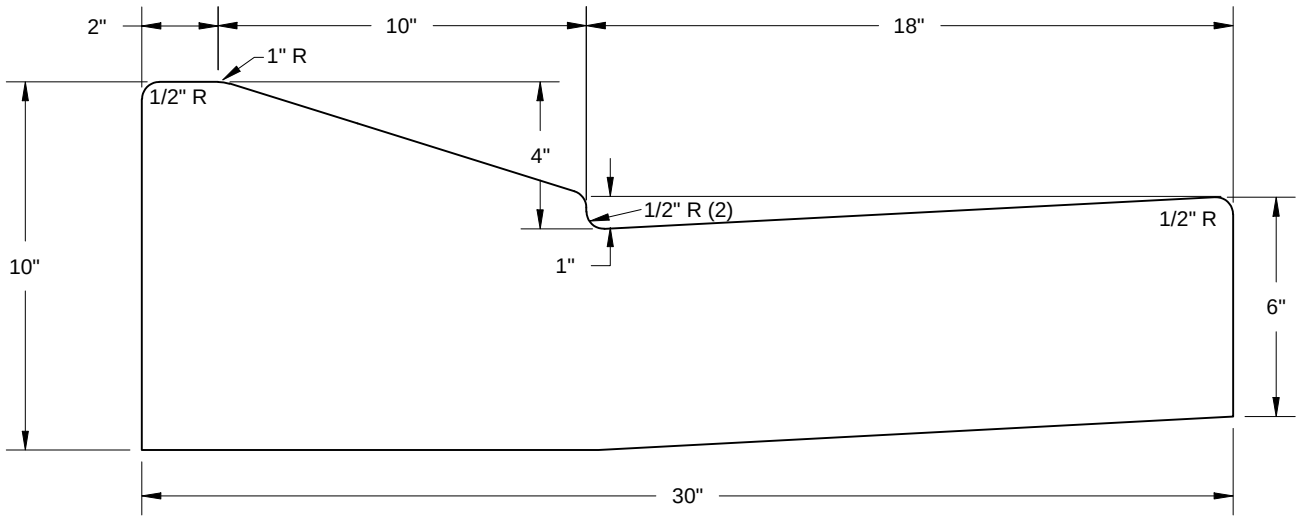

MOUNTABLE CURB & GUTTER

Bismarck Engineering Department	Melvin J. Bullinger, P.E., City Engineer	SCALE: Not to Scale DATE: 1/2003	STANDARD DETAIL NO. **600-11**

NOTE NO. 1 3/4" EXPANSION WITH 3/4"x24" SMOOTH DOWELS & 16" PAPER TUBES. DOWELS SHALL BE GREASED THE FULL LENGTH. ALL PAPER TUBES SHALL BE PLUGGED OR CRIMPED ON OPEN END. ALL JOINTS SHALL BE SEALED.

NOTE NO. 2 CONTRACTION JOINT SCORED 1/3 THE DEPTH OF THE CONCRETE.

NOTE NO. 3 THIS KEYED CONSTRUCTION JOINT WHEN SPECIFIED, SHALL BE PAID FOR AS "EXTRA WORK" IN ACCORDANCE WITH SECTION 126 UNLESS SPECIFICALLY CALLED FOR IN THE SPECIAL PROVISIONS OR SHOWN ON THE PLANS.

NOTE NO. 4 CURB & GUTTER SHALL BE 6" AND UNREINFORCED UNLESS OTHERWISE SPECIFIED.

NOTE NO. 5 DOWELS SHALL BE SUPPORTED BY AN APPROVED SUPPORT MADE OF NO. 7 AWG WIRE.

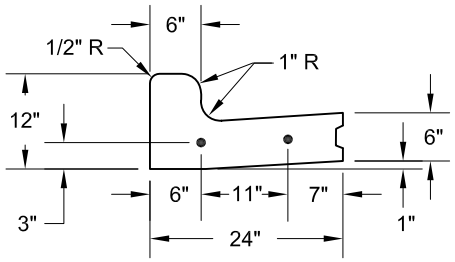

SECTION A-A

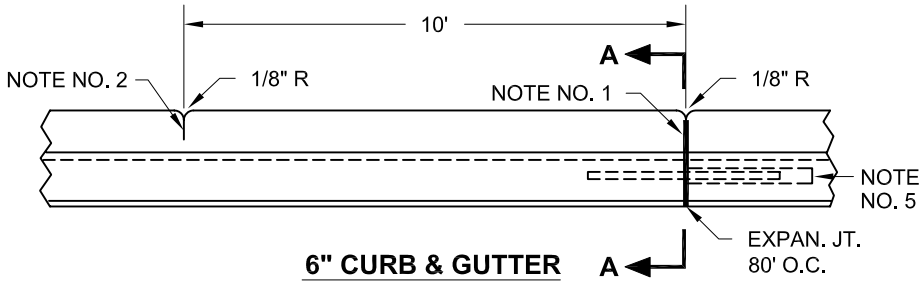

6" CURB & GUTTER PLAN VIEW

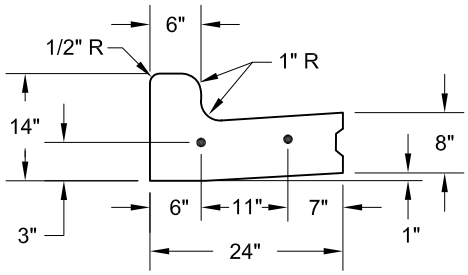

SECTION A_1- A_1

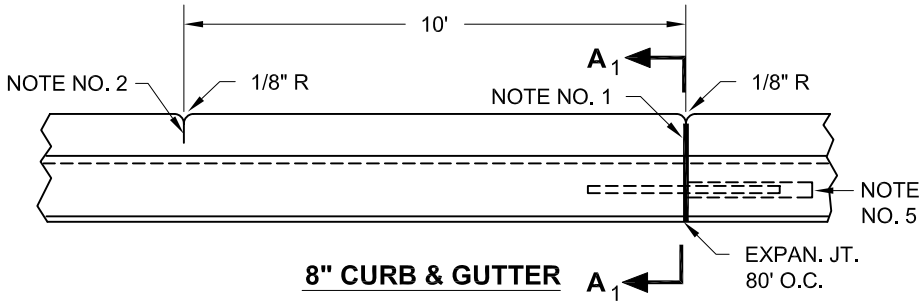

8" CURB & GUTTER PLAN VIEW

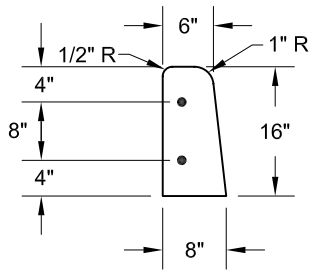

SECTION A_2- A_2

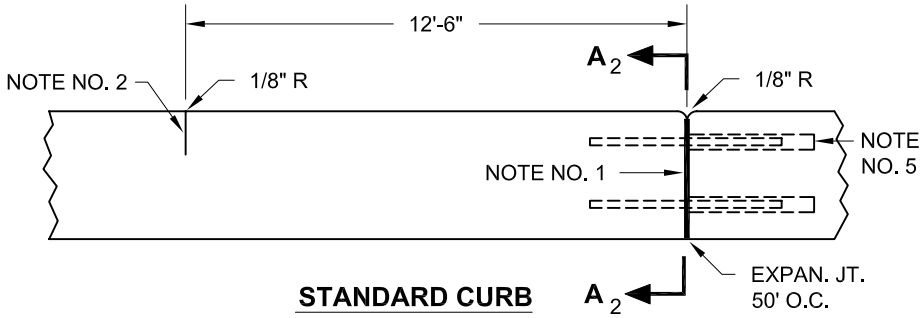

STANDARD CURB PLAN VIEW

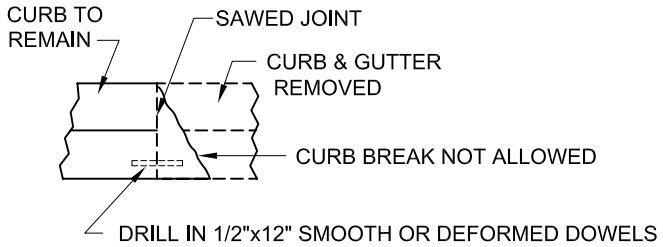

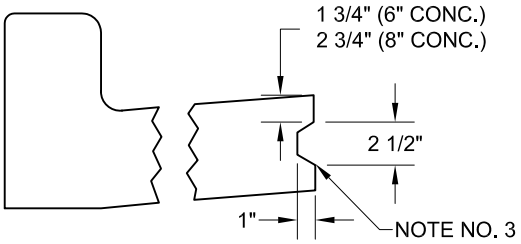

KEYED CONSTRUCTION JOINT DETAIL

STANDARD CURB, CURB & GUTTER

Bismarck Engineering Department	Melvin J. Bullinger, P.E., City Engineer	SCALE: Not to Scale DATE: 4/2007	STANDARD DETAIL NO. 600-12

NOTE NO. 1 3/4" EXPANSION WITH 3/4"x24" SMOOTH DOWELS & 16" PAPER TUBES. DOWELS SHALL BE GREASED THE FULL LENGTH. ALL PAPER TUBES SHALL BE PLUGGED OR CRIMPED ON OPEN END. ALL JOINTS SHALL BE SEALED.

NOTE NO. 2 ALL BARS SHALL BE 1/2" DEFORMED REINFORCING BARS. SPLICES WILL NOT BE PERMITTED.

NOTE NO. 3 THIS KEYED CONSTRUCTION JOINT WHEN SPECIFIED, SHALL BE PAID FOR AS "EXTRA WORK" IN ACCORDANCE WITH SECTION 126 UNLESS SPECIFICALLY CALLED FOR IN THE SPECIAL PROVISIONS OR SHOWN ON THE PLANS.

NOTE NO. 4 CURB & GUTTER SHALL BE 6" UNLESS OTHERWISE SPECIFIED.

NOTE NO. 5 DOWELS SHALL BE SUPPORTED BY AN APPROVED SUPPORT MADE OF NO. 7 AWG WIRE.

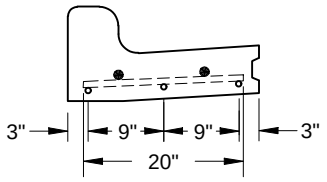

SEE DETAIL 1306 FOR CURB DIMENSIONS

SECTION A_1- A_1

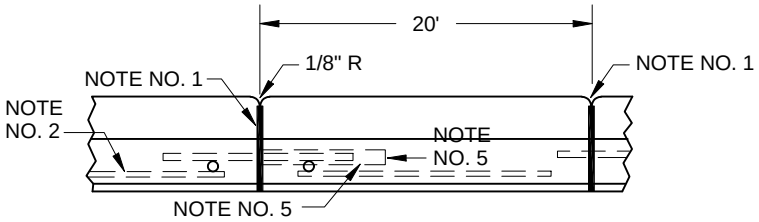

6" CURB & GUTTER

FRONT VIEW

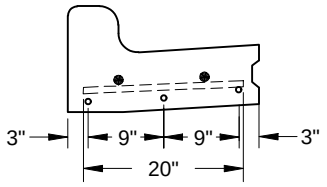

SEE DETAIL 1306 FOR CURB DIMENSIONS

SECTION A_2- A_2

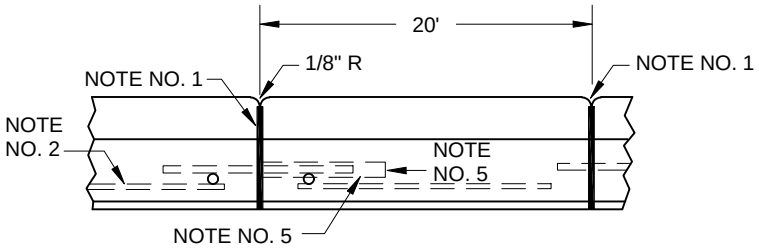

8" CURB & GUTTER

FRONT VIEW

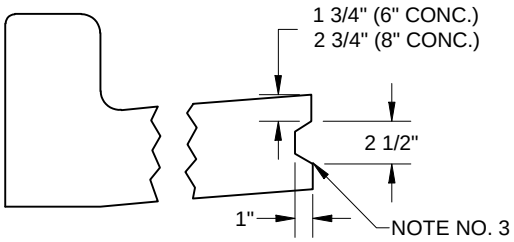

KEYED CONSTRUCTION JOINT DETAIL

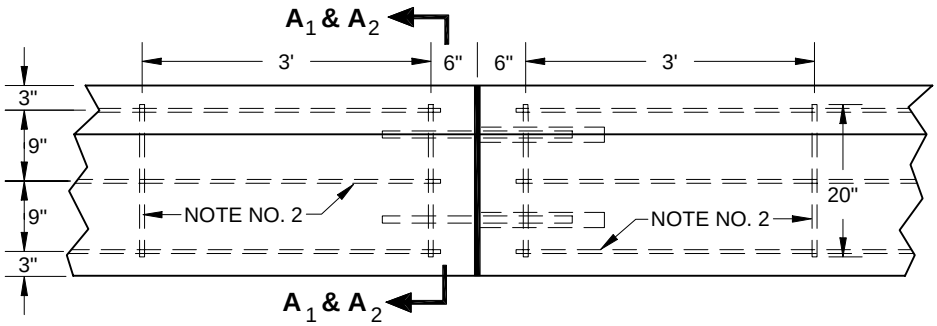

REINFORCED CURB & GUTTER PLAN VIEW

REINFORCED CURB & GUTTER

Bismarck Engineering Department	Melvin J. Bullinger, P.E., City Engineer	SCALE: Not to Scale DATE: 1/2003	STANDARD DETAIL NO. 600-13

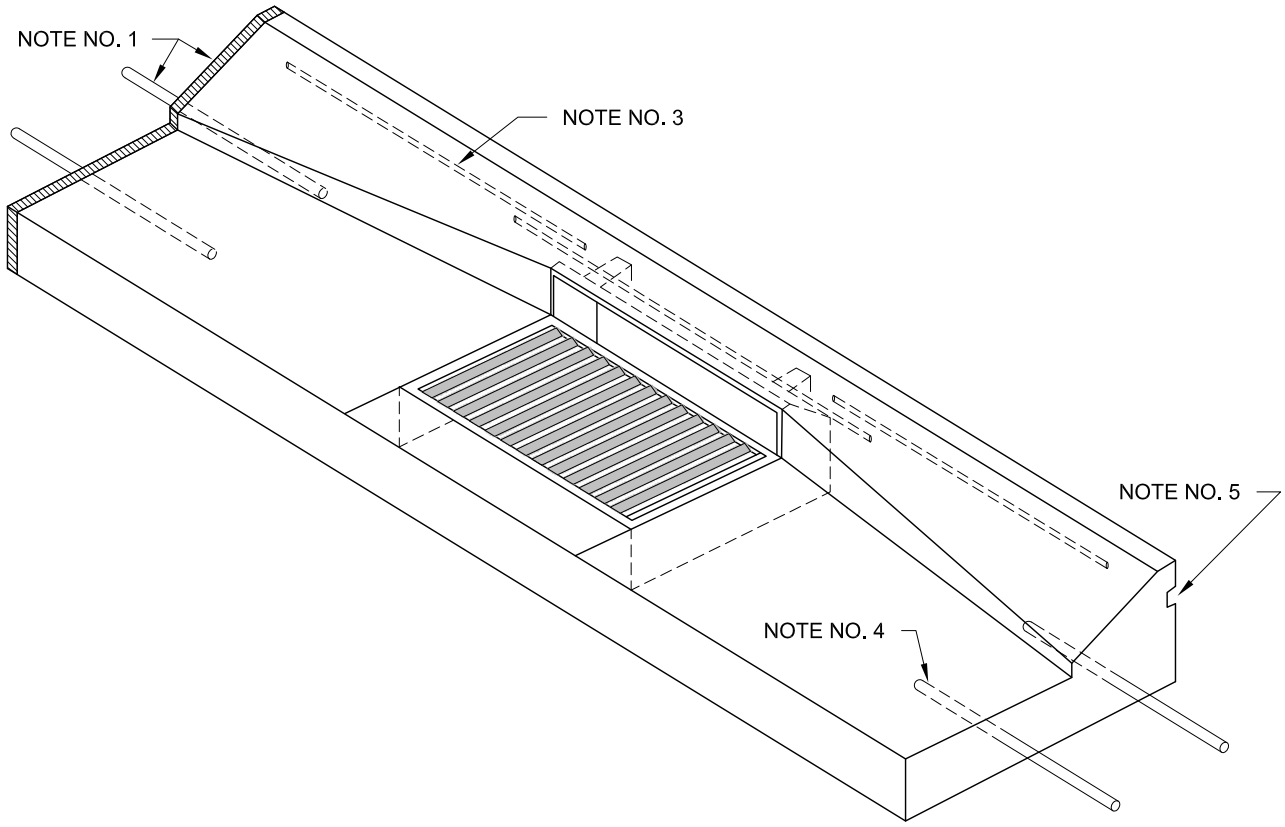

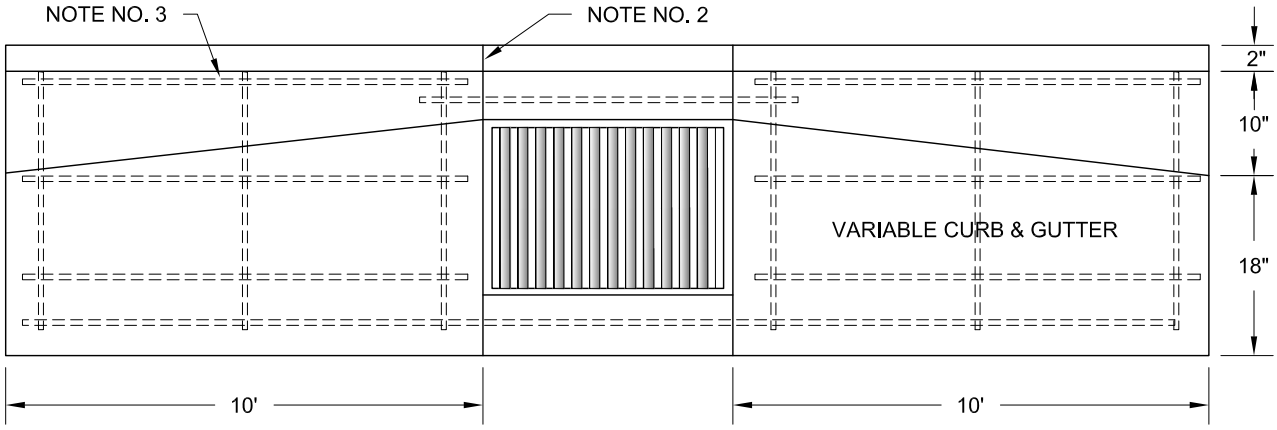

NOTE NO. 1 DRILLED IN DOWELS & NO. 4 REBAR OR 3/4" EXPANSION WITH 3/4"x24" SMOOTH DOWELS & 16" PAPER TUBES, OR 1/2" REBAR DRILLED WITH 5/8" BIT. DOWELS SHALL BE GREASED THE FULL LENGTH. ALL PAPER TUBES SHALL BE PLUGGED OR CRIMPED ON OPEN END AS DETERMINED BY THE ENGINEER. ALL JOINTS SHALL BE SEALED.

NOTE NO. 2 CONTRACTION JOINT SCORED TO 1/3 DEPTH OF THE CONCRETE.

NOTE NO. 3 CURB & GUTTER SHALL BE 6" & REINFORCED 10' ON EITHER SIDE OF THE INLET. ALL BARS SHALL BE 1/2" DIA. DEFORMED REINFORCING BARS. SPLICES WILL NOT BE PERMITTED.

NOTE NO. 4 DOWELS SHALL BE SUPPORTED BY AN APPROVED SUPPORT MADE OF NO. 7 AWG WIRE.

NOTE NO. 5 A CONTINUOUS KEYED CONSTRUCTION JOINT SHALL BE USED.

MOUNTABLE CURB & GUTTER W/ INLET

Bismarck Engineering Department	Melvin J. Bullinger, P.E., City Engineer	SCALE: Not to Scale DATE: 3/2012	STANDARD DETAIL NO. **600-14**

NOTE NO. 1 3/4" EXPANSION JOINT WITH 3/4"x24" SMOOTH DOWELS & 16" PAPER TUBES. DOWELS SHALL BE GREASED THE FULL LENGTH. ALL PAPER TUBES SHALL BE PLUGGED OR CRIMPED ON OPEN END. ALL JOINTS SHALL BE SEALED. DOWELS SHALL BE SUPPORTED BY AN APPROVED SUPPORT MADE OF NO. 7 AWG WIRE.

NOTE NO. 2 CONTRACTION JOINT SCORED 1/3 THE DEPTH OF THE CONCRETE. JOINT SHALL BE SEALED.

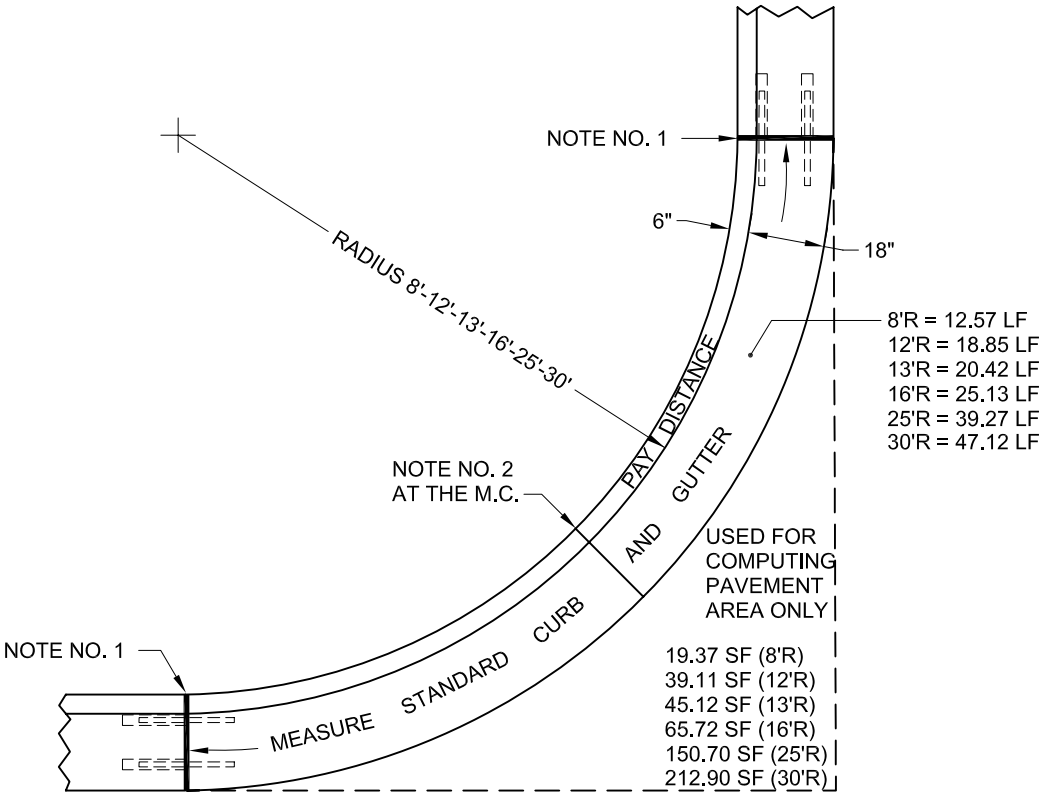

RADIUS	USE
8'	SPECIAL DESIGNED LOCATION
12'	SPECIAL DESIGNED LOCATION
13'	40' STREET INTERSECTS 40' OR 44' STREET
16'	40' OR 44' STREET INTERSECTS 48' STREET
25'	48' STREET INTERSECTS 48' STREET
30'	SPECIAL DESIGNED LOCATION

INTERSECTION CURVE

Bismarck Engineering Department

Melvin J. Bullinger, P.E., City Engineer

SCALE: Not to Scale

DATE: 4/2007

STANDARD DETAIL NO. **600-15**

NOTE NO. 1 3/4" EXPANSION JOINT WITH 3/4"x24" SMOOTH DOWELS & 16" PAPER TUBES. DOWELS SHALL BE GREASED THE FULL LENGTH. ALL PAPER TUBES SHALL BE PLUGGED OR CRIMPED ON ON END. ALL JOINTS SHALL BE SEALED.

NOTE NO. 2 DOWELS SHALL BE SUPPORTED BY AN APPROVED SUPPORT MADE OF NO. 7 AWG WIRE.

NOTE NO. 3 CONTRACTION JOINT SCORED 1/3 THE DEPTH OF THE CONCRETE. ALL JOINTS SHALL BE SEALED.

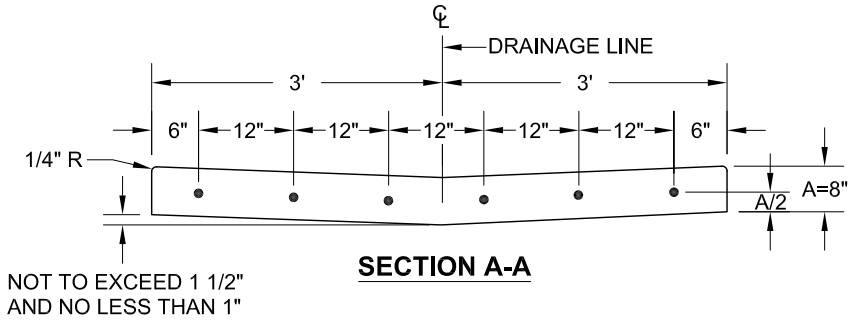

SECTION A-A

STR. WIDTH	PVMT. WIDTH	JT. SPACING
37'	34'	8.5'
40'	37'	9.25'
44'	41'	8.2'
48'	45'	9.0'
52'	49'	9.8'

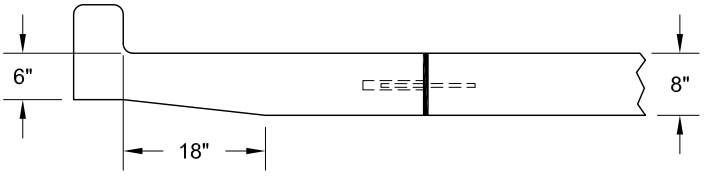

SECTION B-B

TRANSITION TO AN 8" VALLEY GUTTER

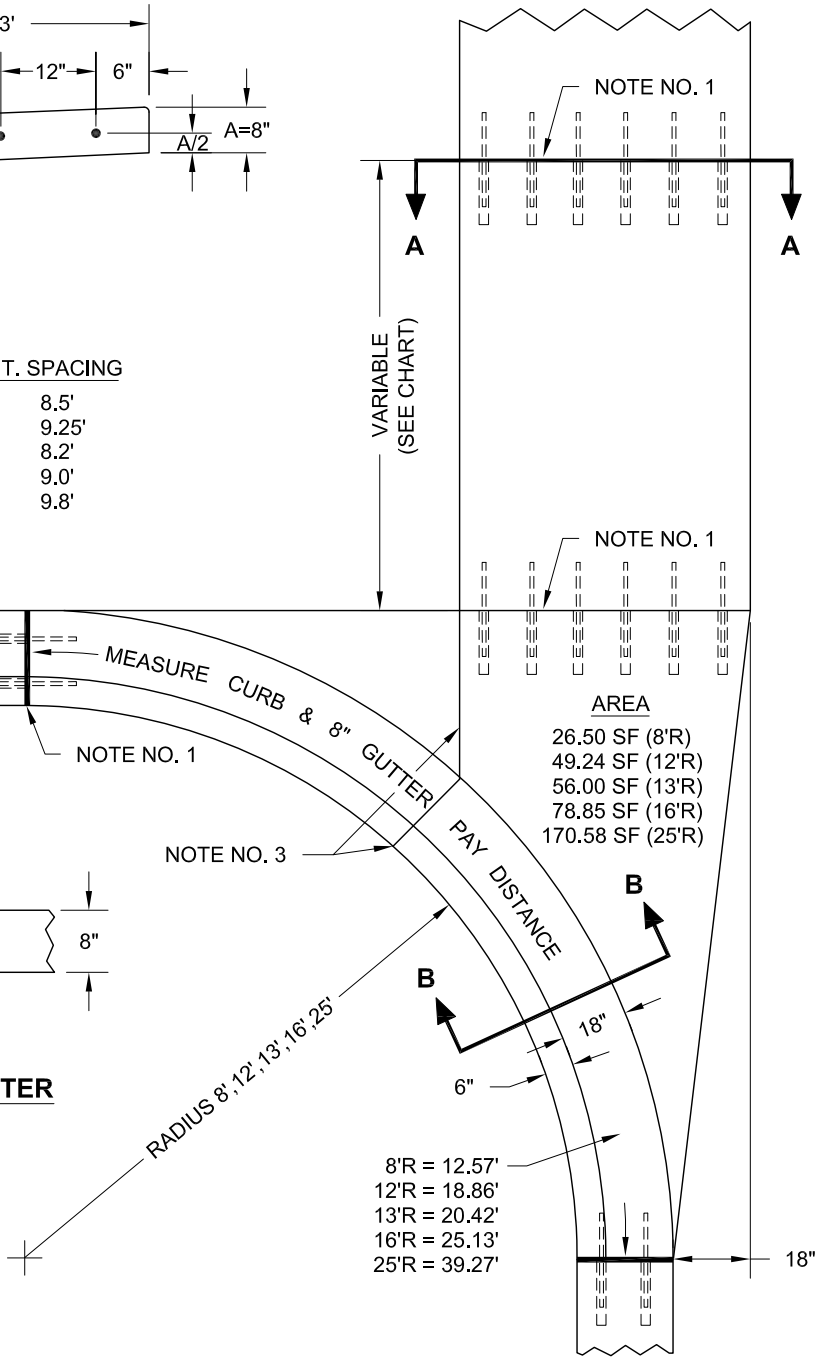

AREA

26.50 SF (8'R)
49.24 SF (12'R)
56.00 SF (13'R)
78.85 SF (16'R)
170.58 SF (25'R)

PLAN VIEW

VALLEY GUTTER

Bismarck Engineering Department	Melvin J. Bullinger, P.E., City Engineer	SCALE: Not to Scale DATE: 3/2012	STANDARD DETAIL NO. 600-16

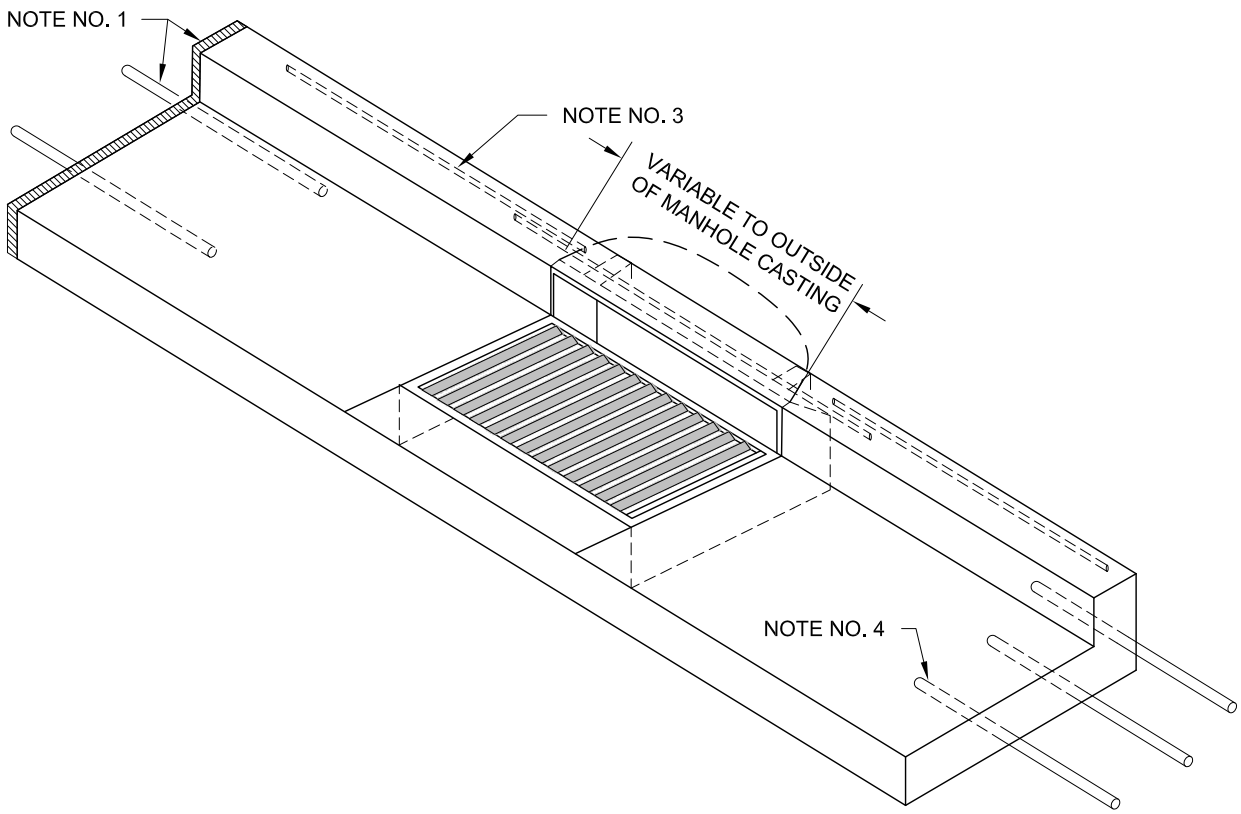

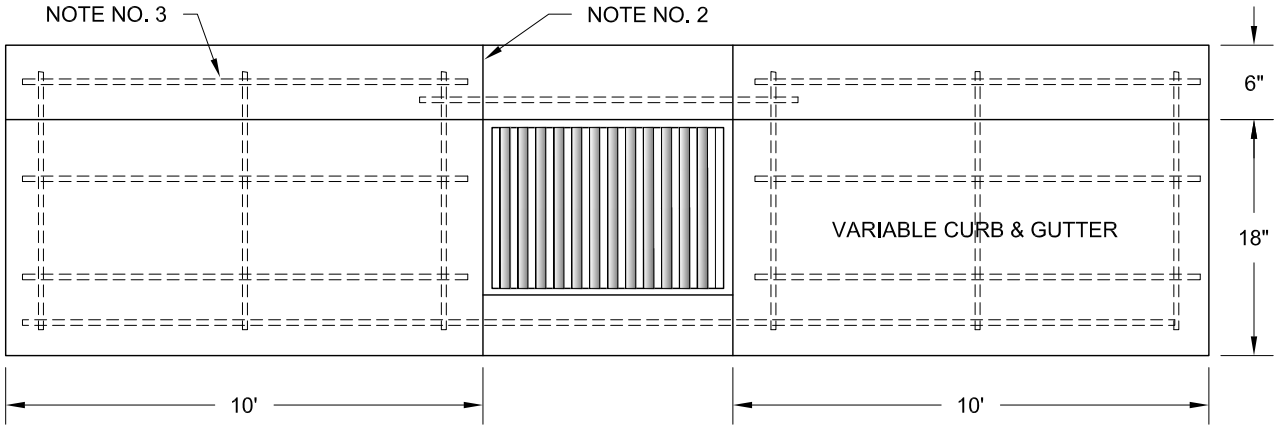

NOTE NO. 1 DRILLED IN DOWELS & NO. 4 REBAR OR 3/4" EXPANSION WITH 3/4"x24" SMOOTH DOWELS & 16" PAPER TUBES, OR 1/2" REBAR DRILLED WITH 5/8" BIT. DOWELS SHALL BE GREASED THE FULL LENGTH. ALL PAPER TUBES SHALL BE PLUGGED OR CRIMPED ON OPEN END AS DETERMINED BY THE ENGINEER. ALL JOINTS SHALL BE SEALED.

NOTE NO. 2 CONTRACTION JOINT SCORED TO 1/3 DEPTH OF THE CONCRETE.

NOTE NO. 3 CURB & GUTTER SHALL BE 6" & REINFORCED 10' ON EITHER SIDE OF THE INLET. ALL BARS SHALL BE 1/2" DIA. DEFORMED REINFORCING BARS. SPLICES WILL NOT BE PERMITTED.

NOTE NO. 4 DOWELS SHALL BE SUPPORTED BY AN APPROVED SUPPORT MADE OF NO. 7 AWG WIRE.

NOTE NO. 5 WIDENING CURB BEHIND INLET SHALL BE INCIDENTAL.

STANDARD CURB & GUTTER W/ INLET

Bismarck Engineering Department	Melvin J. Bullinger, P.E., City Engineer	SCALE: Not to Scale DATE: 3/2012	STANDARD DETAIL NO. **600-17**

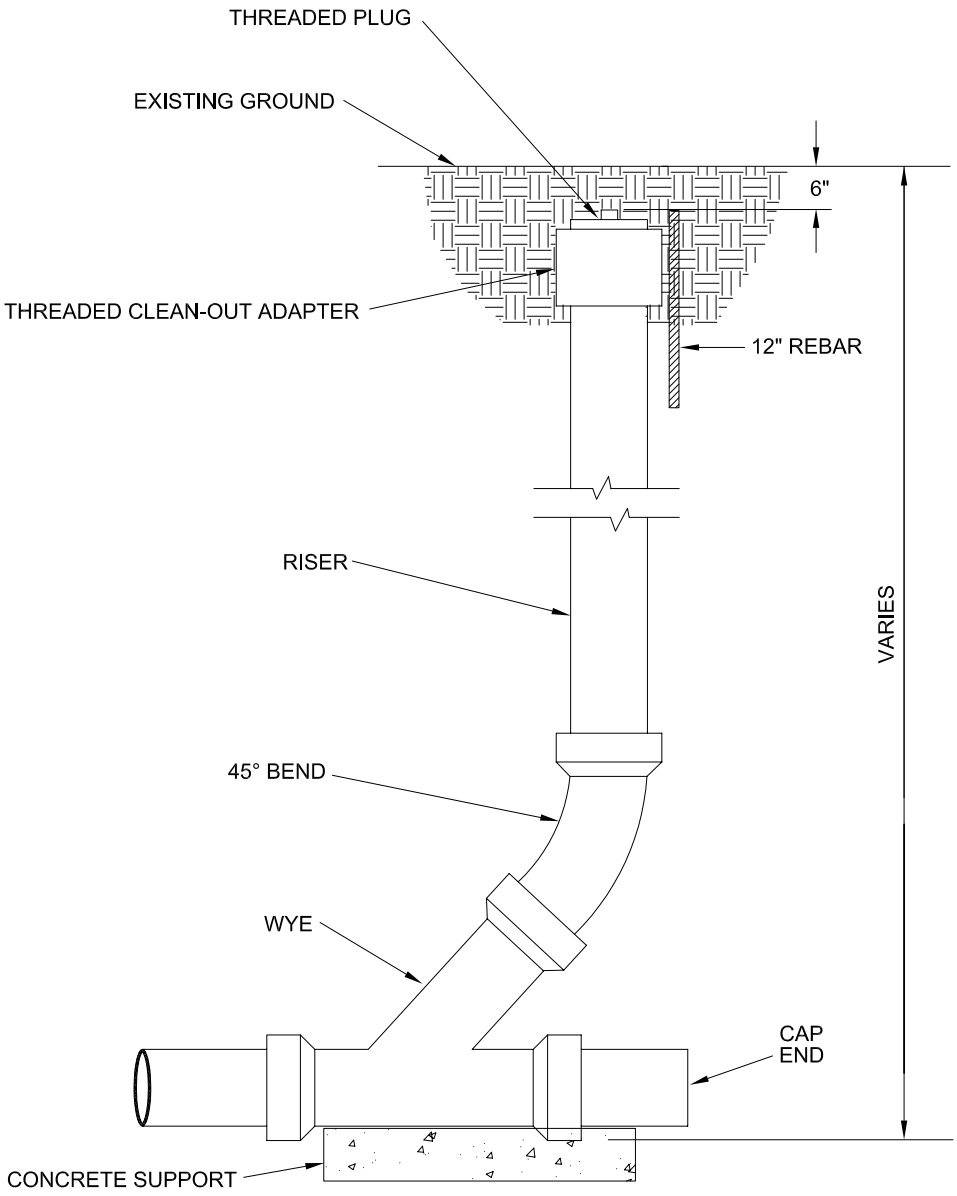

CLEAN-OUT DETAIL

Bismarck Engineering Department	Melvin J. Bullinger, P.E., City Engineer	SCALE: Not to Scale DATE: 3/2004	STANDARD DETAIL NO. 801-1

PIPE BEDDING QUANTITIES - SANITARY SEWER

4" to 27" Based on SDR35 PVC
30" to 48" Based on ASTM F-794 PVC

PIPE SIZE	TRENCH WIDTH	C.Y. / FT.	TONS / FT.
4"	48"	0.0736	0.1251
6"	48"	0.0842	0.1431
8"	48"	0.0941	0.1600
10"	48"	0.1031	0.1753
12"	49"	0.1134	0.1928
15"	51"	0.1322	0.2247
18"	55"	0.1535	0.2610
21"	58"	0.1750	0.2975
24"	61"	0.1952	0.3318
27"	64"	0.2170	0.3689
30"	68"	0.2450	0.4165
36"	74"	0.2915	0.4956
42"	80"	0.3397	0.5775
48"	87"	0.3971	0.6751

5 Tons / Manhole

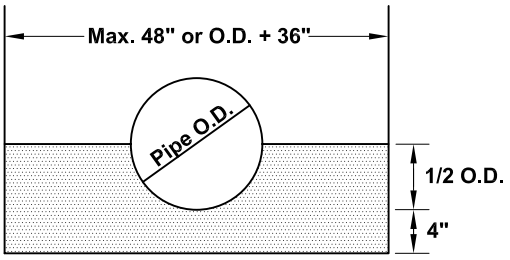

PIPE BEDDING QUANTITIES - SANITARY SEWER

Bismarck Engineering Department

Melvin J. Bullinger, P.E., City Engineer

SCALE: Not to Scale

DATE: 4/2007

STANDARD DETAIL NO. 801-2

PIPE BEDDING QUANTITIES - STORM SEWER

12" to 15" Based on SDR35 PVC
18" to 30" Based on Ribbed PVC
33" to 84" Based on RC Pipe

PIPE SIZE	TRENCH WIDTH	C.Y. / FT.	TONS / FT.
12"	49"	0.1134	0.1928
15"	52"	0.1322	0.2247
18"	56"	0.1595	0.2712
21"	59"	0.1818	0.3091
24"	62"	0.2022	0.3437
27"	65"	0.2247	0.3820
30"	69"	0.2524	0.4291
33"	77"	0.3146	0.5348
36"	80"	0.3394	0.5770
42"	87"	0.3974	0.6756
48"	94"	0.4581	0.7788
54"	101"	0.5214	0.8864
60"	108"	0.5875	0.9988
66"	115"	0.6563	1.1157
72"	122"	0.7278	1.2373
78"	129"	0.8020	1.3634
84"	136"	0.8789	1.4941

5 Tons / Manhole
2.5 Tons / Inlet
2.5 Tons / F.E.S.

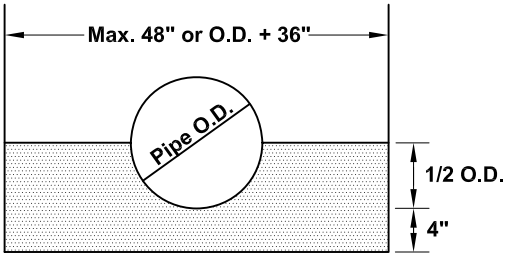

PIPE BEDDING QUANTITIES - STORM SEWER

Bismarck Engineering Department

Melvin J. Bullinger, P.E., City Engineer

SCALE: Not to Scale

DATE: 4/2007

STANDARD DETAIL NO. 802-1

NOTES:

1. CONNECTION AND PIPE TO BE BACKFILLED PER CLASS SPECIFIED.
2. IN LIEU OF AN INTERNAL CYLINDER, AN HDPE WATERTIGHT REPAIR COUPLER CAN BE USED.
3. INTERNAL CYLINDER ADAPTER IS NOT RECOMMENDED FOR DOWNSTREAM CONNECTIONS.

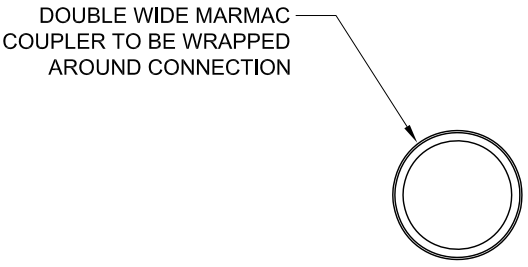

SECTION A-A

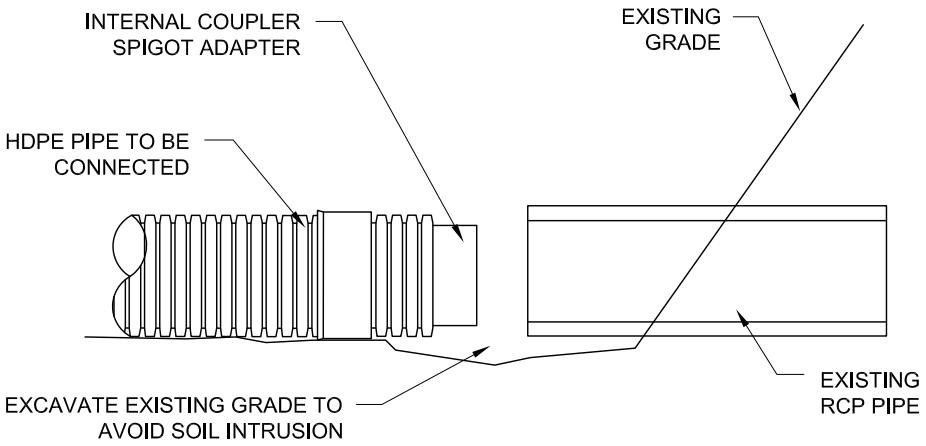

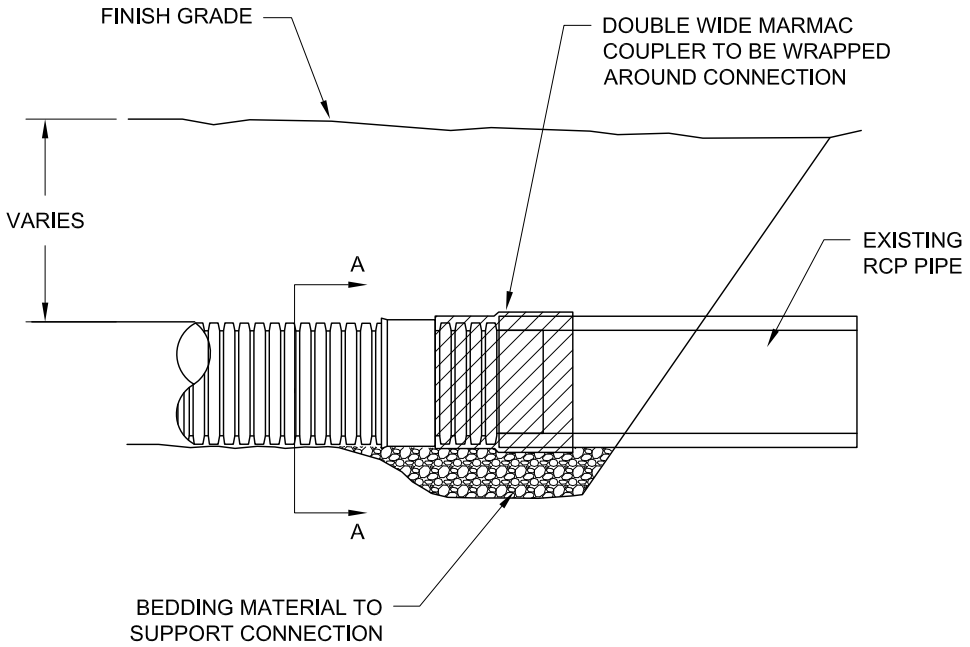

HDPE TO REINFORCED CONCRETE PIPE CONNECTION DETAIL

Bismarck Engineering Department	Melvin J. Bullinger, P.E., City Engineer	SCALE: Not to Scale DATE: 3/2012	STANDARD DETAIL NO. 802-2

NOTE NO. 1 BLOCKING OF TYPICAL HORIZONTAL BEND WILL INCLUDE ALL BENDS 11 1/4° (1/32) TO 90° (1/4)

NOTE NO. 2 BLOCK TEE AS SHOWN. IN THE EVENT THAT ONE SIDE OF THE MAIN IS PLUGGED, 2 THRUST BLOCKS WILL BE REQUIRED.

NOTE NO. 3 BLOCKING OF PLUG IS TO INCLUDE PLYBOARD BETWEEN THE PLUG AND CONCRETE.

NOTE NO. 4 BLOCKING OF CROSS WITH 2 PLUGS IS AS SHOWN. WITH ONLY 1 PLUG PROCEED SAME AS TEE.

NOTE NO. 5 INSTALL CONCRETE ANCHOR AND TIE DOWNS AS SHOWN IF SIZE IS REDUCED 2 PIPE SIZES OR MORE.

NOTE NO. 6 ALL VERTICAL BENDS TO BE BLOCKED AND TIED DOWN AS SHOWN.

NOTE NO. 7 ALL HYDRANTS TO BE BLOCKED AS SHOWN. KEEP CONCRETE AWAY FROM WEEP HOLES.

NOTE NO. 8 THE END AREA OF CONCRETE THRUST BLOCKS SHALL BE SUBMITTED WITH SOIL BEARING CHARACTERISTICS TO THE ENGINEER FOR APPROVAL.

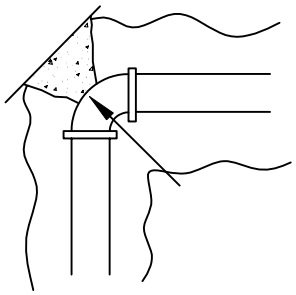

TYPICAL HORIZONTAL BEND
NOTE NO. 1

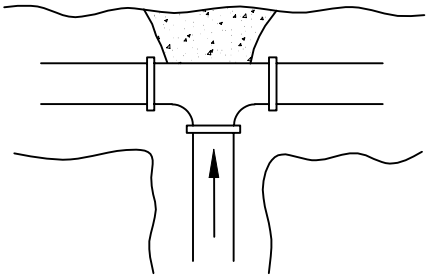

TEE AND WYE
NOTE NO. 2

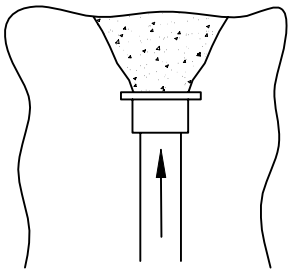

DEAD END OR PLUG
NOTE NO. 3

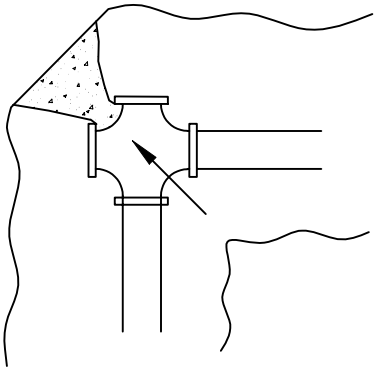

CROSS - NOTE NO. 4

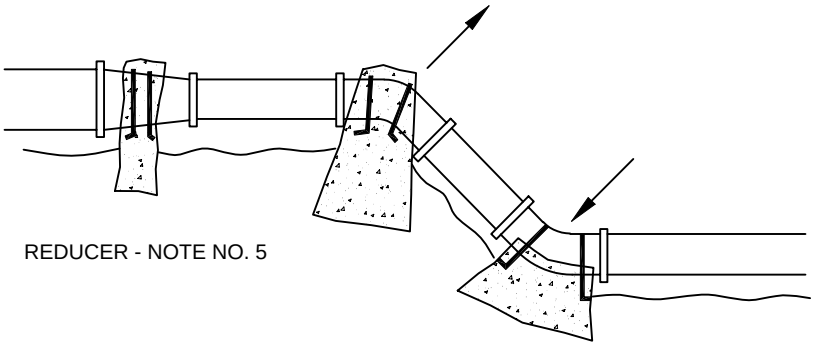

REDUCER - NOTE NO. 5

TYPICAL VERTICAL BENDS
NOTE NO. 6

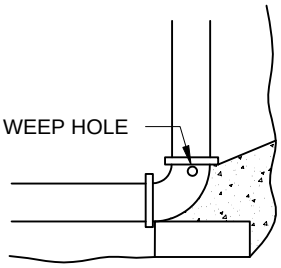

HYDRANT NOTE NO. 7

CONCRETE THRUST BLOCKING

Bismarck Engineering Department	Melvin J. Bullinger, P.E., City Engineer	SCALE: Not to Scale DATE: 1/2003	STANDARD DETAIL NO. 900-1

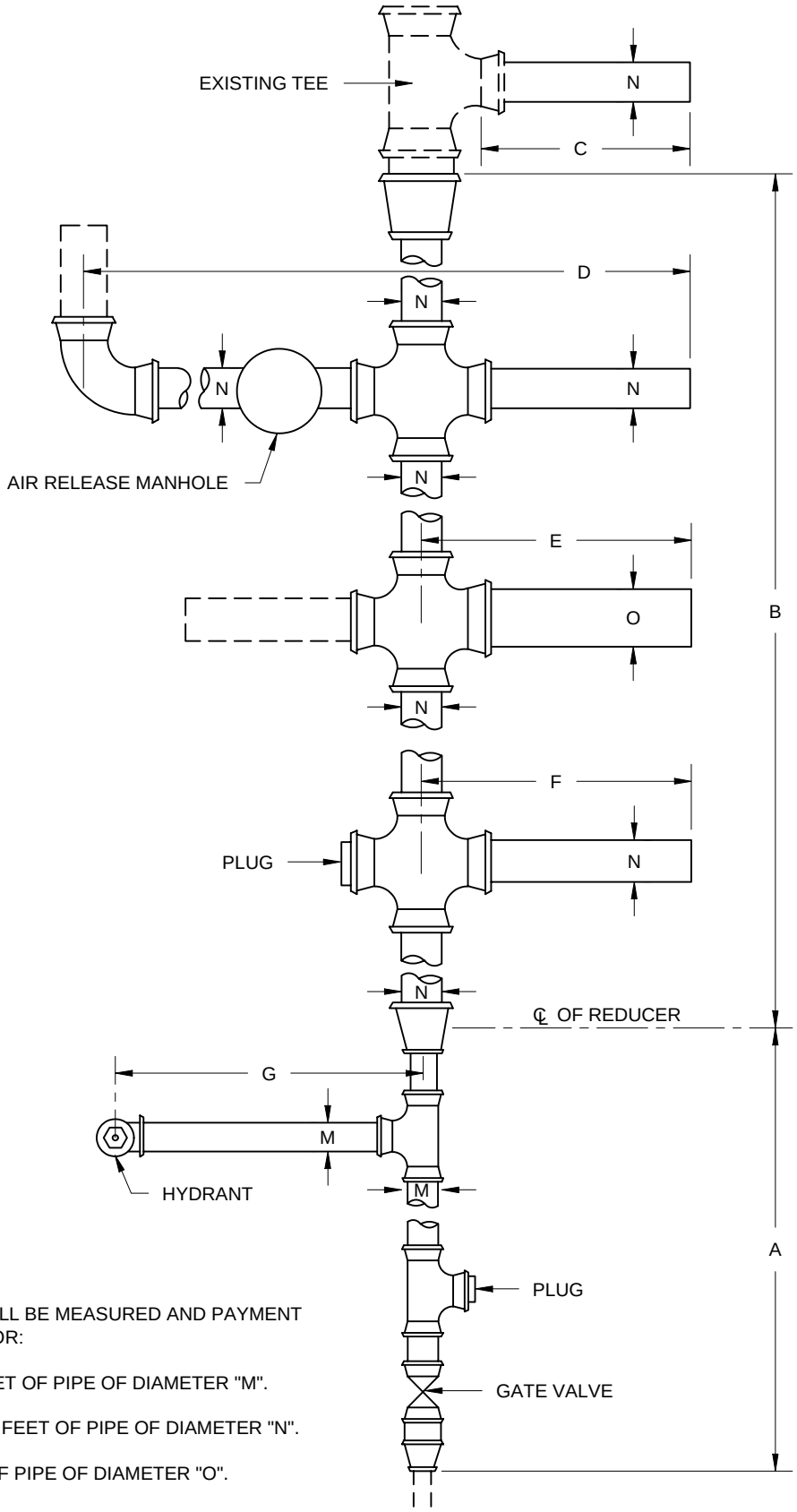

WATERMAIN SHALL BE MEASURED AND PAYMENT WILL BE MADE FOR:

A & G LINEAR FEET OF PIPE OF DIAMETER "M".

B,C,D & F LINEAR FEET OF PIPE OF DIAMETER "N".

E LINEAR FEET OF PIPE OF DIAMETER "O".

WATERMAIN PAYMENT DIAGRAM

Bismarck Engineering Department	Melvin J. Bullinger, P.E., City Engineer	SCALE: Not to Scale DATE: 1/2003	STANDARD DETAIL NO. 900-2

PIPE BEDDING QUANTITIES - WATERMAIN

6" to 18" Based on C900, C905 PVC or C909 PVCO

20" Based on CL250 DI

24" Based on CL250 DI

30" to 48" Based on CL150 DI

PIPE SIZE	TRENCH WIDTH	C.Y. / FT.	TONS / FT.
4"	48"	0.1287	0.2188
6"	48"	0.1496	0.2543
8"	48"	0.1693	0.2878
10"	48"	0.1862	0.3165
12"	49"	0.2068	0.3516
16"	54"	0.2638	0.4485
18"	56"	0.2905	0.4939
20"	58"	0.3175	0.5398
24"	62"	0.3726	0.6334
30"	68"	0.4578	0.7783
36"	74"	0.5468	0.9296
42"	81"	0.6521	1.1086
48"	87"	0.7497	1.2745

5 Tons / Manhole
2.5 Tons / Hydrant
0.1 Tons / LF of Service Line (2" & Under)

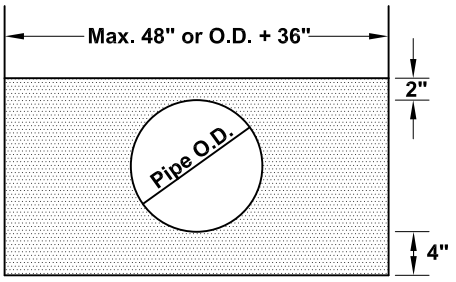

PIPE BEDDING QUANTITIES - WATER

Bismarck Engineering Department

Melvin J. Bullinger, P.E., City Engineer

SCALE: Not to Scale

DATE: 4/2007

STANDARD DETAIL NO. 900-3

NOTE NO.1 - MANHOLE CASTING AND COVER SHALL BE AS DEFINED IN SECTION 1205-2.5.

NOTE NO.2 - ALLOWANCE FOR ADJUSTMENT - 0" TO 6" - SEE STANDARD DETAIL NO. 1206-1.

NOTE NO.3 - CRETEX P2 GASKETED JOINT FOR 48" MANHOLES, CRETEX CX-4 JOINT FOR ALL OTHER SIZES OF MANHOLES OR EXTERIOR SEAL BY PRESS-SEAL GASKET CORP. EZ WRAP AND EZ STIK NO. 4 PRIMER, CRETEX SPECIALTY PRODUCTS "MAC WRAP", OR AN APPROVED EQUAL.

NOTE NO.4 - IF PRECAST MANHOLE BASE IS USED, FLOOR SHALL BE GROUTED AND SLOPED, AS SHOWN, FROM 1\2 THE DIAMETER OF THE PIPE. SEE SECTION 1205-2.9 FOR PRECAST MANHOLE BASE REINFORCEMENT.

NOTE NO.5 - MANHOLE TOP SECTION SHALL BE ECCENTRIC FOR 48" MANHOLES.

NOTE NO.6 - CAST IN PLACE MANHOLE BASES SHALL BE DIMENSIONED AS SHOWN UNLESS OTHERWISE INDICATED. BASES SHALL BE REINFORCED WITH NO.4 REBAR SPACED 15" ON CENTER BOTH WAYS.

NOTE NO.7 - EXTERNAL MANHOLE CHIMNEY SEAL AS MANUFACTURED BY CRETEX OR AN APPROVED EQUAL, IF SPECIFIED.

NOTE NO.8 - STEPS SHALL NOT BE PLACED IN SANITARY SEWER, STORM SEWER OR AIR RELEASE MANHOLES OR INLETS UNLESS SPECIFIED. IF SPECIFIED, THE MANHOLE STEPS SHALL BE DELTA SUREFOOT OR APPROVED EQUAL. STEPS SHALL BE SPACED 16" ON CENTER.

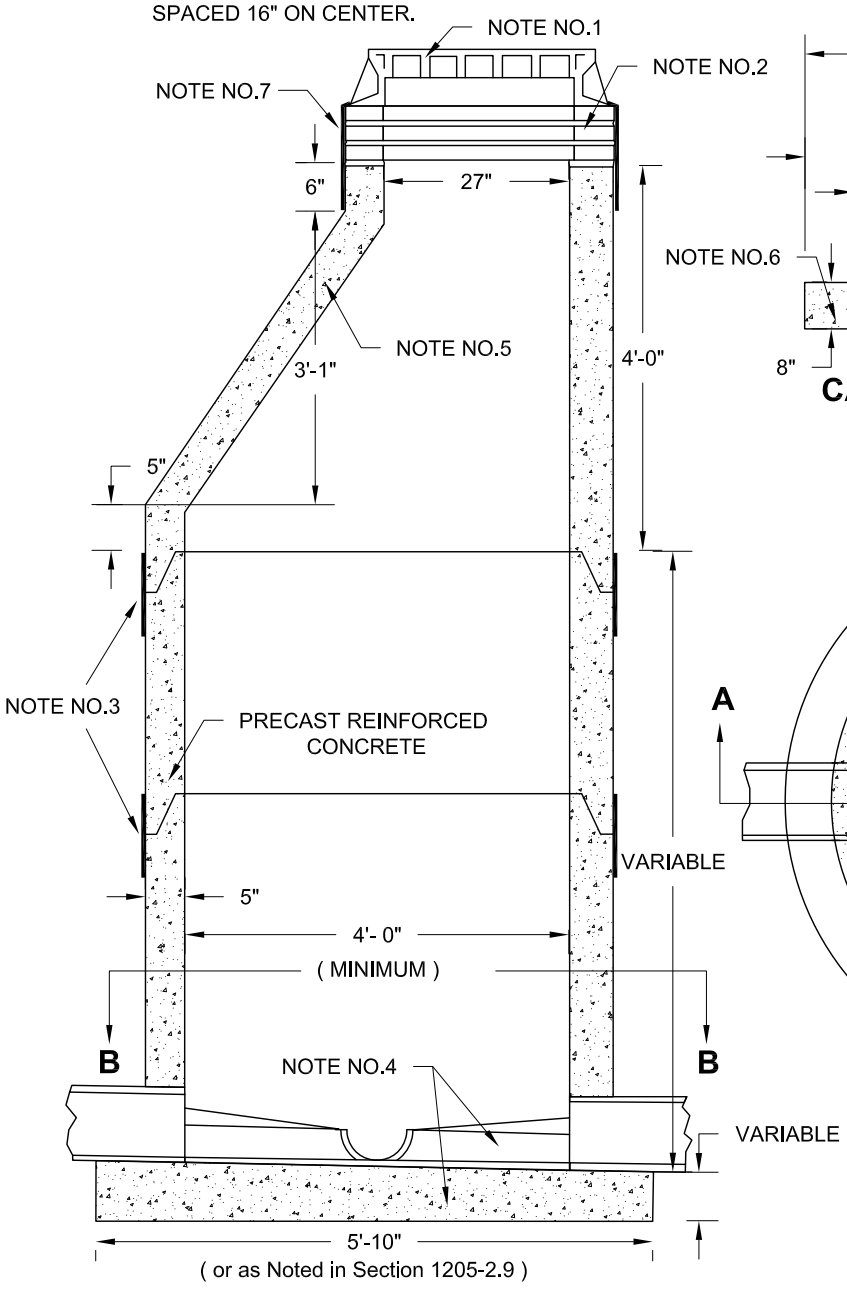

SECTION A-A

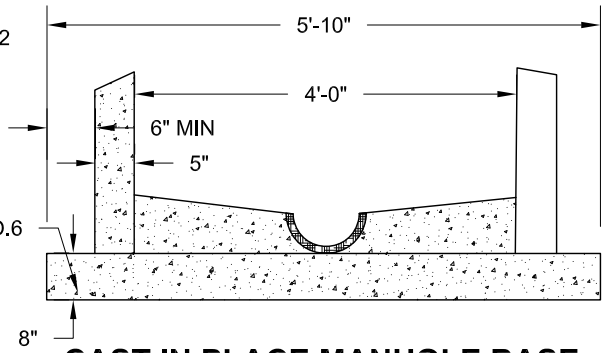

CAST IN PLACE MANHOLE BASE

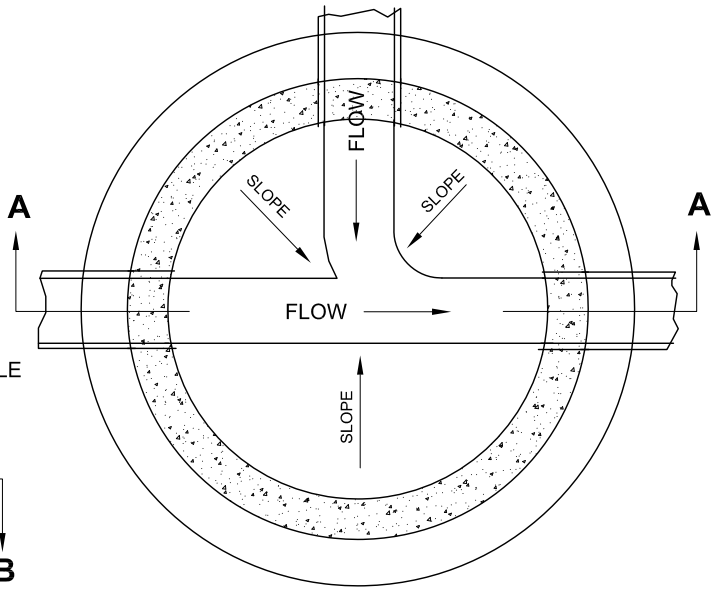

SECTION B-B

SANITARY SEWER MANHOLE

Bismarck Engineering Department	Melvin J. Bullinger, P.E., City Engineer	SCALE: Not to Scale DATE: 3/2012	STANDARD DETAIL NO. 1205-1

NOTE NO.1 - MANHOLE CASTING AND COVER SHALL BE AS DEFINED IN SECTION 1205-2.5.

NOTE NO.2 - ALLOWANCE FOR ADJUSTMENT - 0" TO 6" - SEE STANDARD DETAIL NO. 1206-1.

NOTE NO.3 - CRETEX P2 GASKETED JOINT FOR 48" MANHOLES, CRETEX CX-4 JOINT FOR ALL OTHER SIZES OF MANHOLES OR EXTERIOR SEAL BY PRESS-SEAL GASKET CORP. EZ WRAP AND EZ STIK NO. 4 PRIMER, CRETEX SPECIALTY PRODUCTS "MAC WRAP", OR AN APPROVED EQUAL.

NOTE NO.4 - IF PRECAST MANHOLE BASE IS USED, FLOOR SHALL BE GROUTED AND SLOPED, AS SHOWN, FROM 1\2 THE DIAMETER OF THE PIPE. SEE SECTION 1205-2.9 FOR PRECAST MANHOLE BASE REINFORCEMENT.

NOTE NO.5 - MANHOLE TOP SECTION SHALL BE ECCENTRIC FOR 48" MANHOLES.

NOTE NO.6 - CAST IN PLACE MANHOLE BASES SHALL BE DIMENSIONED AS SHOWN UNLESS OTHERWISE INDICATED. BASES SHALL BE REINFORCED WITH NO.4 REBAR SPACED 15" ON CENTER BOTH WAYS.

NOTE NO.7 - ENCASE PIPE AND ELBOW IN CONCRETE. CONCRETE SHALL BE NOT LESS THAN 6" THICK, MEASURED FROM THE OUTSIDE WALL OF THE PIPE.

NOTE NO.8 - EXTERNAL MANHOLE CHIMNEY SEAL AS MANUFACTURED BY CRETEX OR AN APPROVED EQUAL, IF SPECIFIED.

NOTE NO.9 - STEPS SHALL NOT BE PLACED IN SANITARY SEWER, STORM SEWER OR AIR RELEASE MANHOLES OR INLETS UNLESS SPECIFIED. IF SPECIFIED, THE MANHOLE STEPS SHALL BE DELTA SUREFOOT OR APPROVED EQUAL. STEPS SHALL BE SPACED 16" ON CENTER.

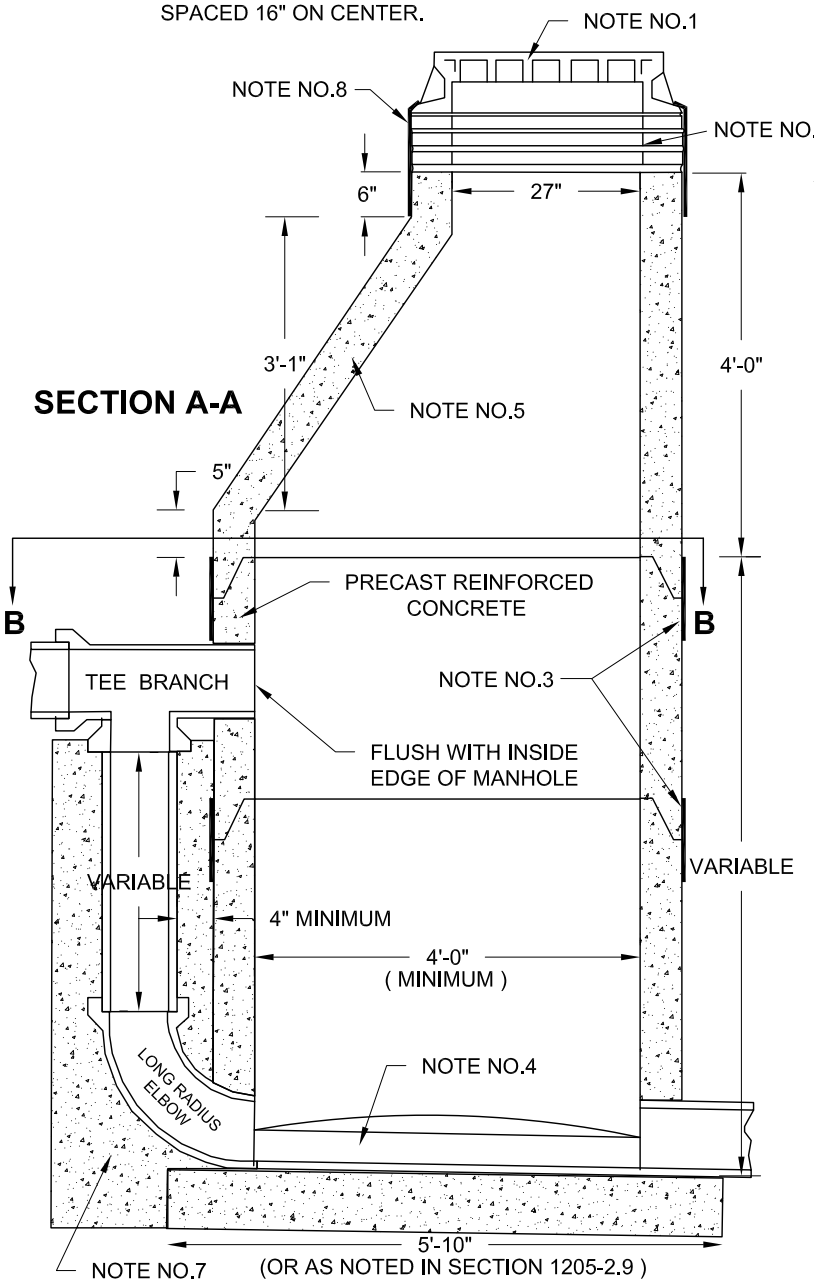

SECTION A-A

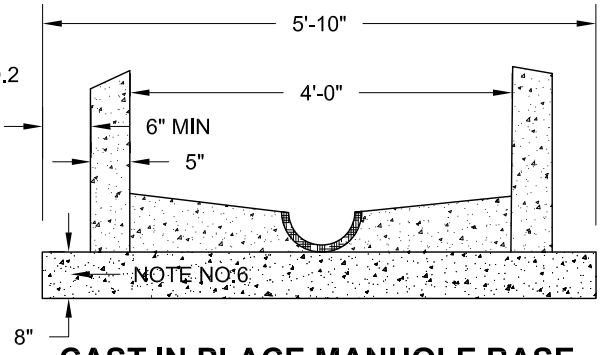

CAST IN PLACE MANHOLE BASE

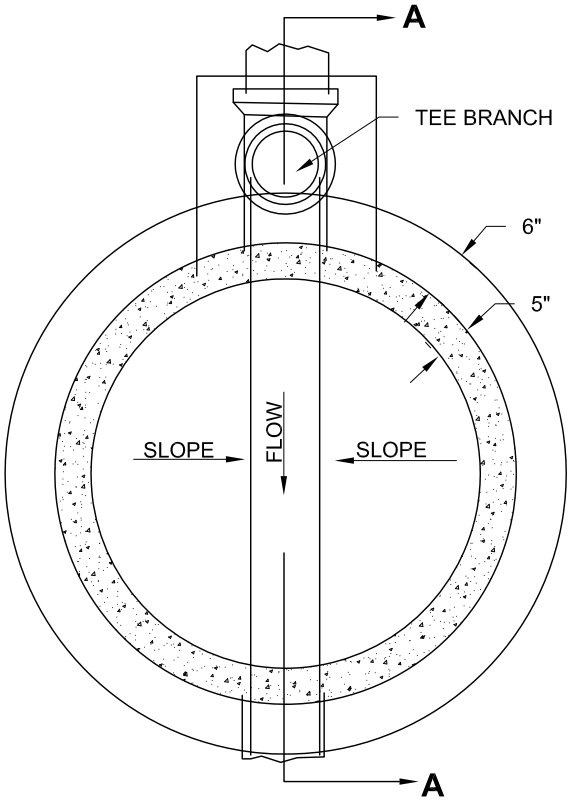

SECTION B-B

SANITARY SEWER DROP MANHOLE

Bismarck Engineering Department	Melvin J. Bullinger, P.E., City Engineer	SCALE: Not to Scale DATE: 3/2012	STANDARD DETAIL NO. 1205-2

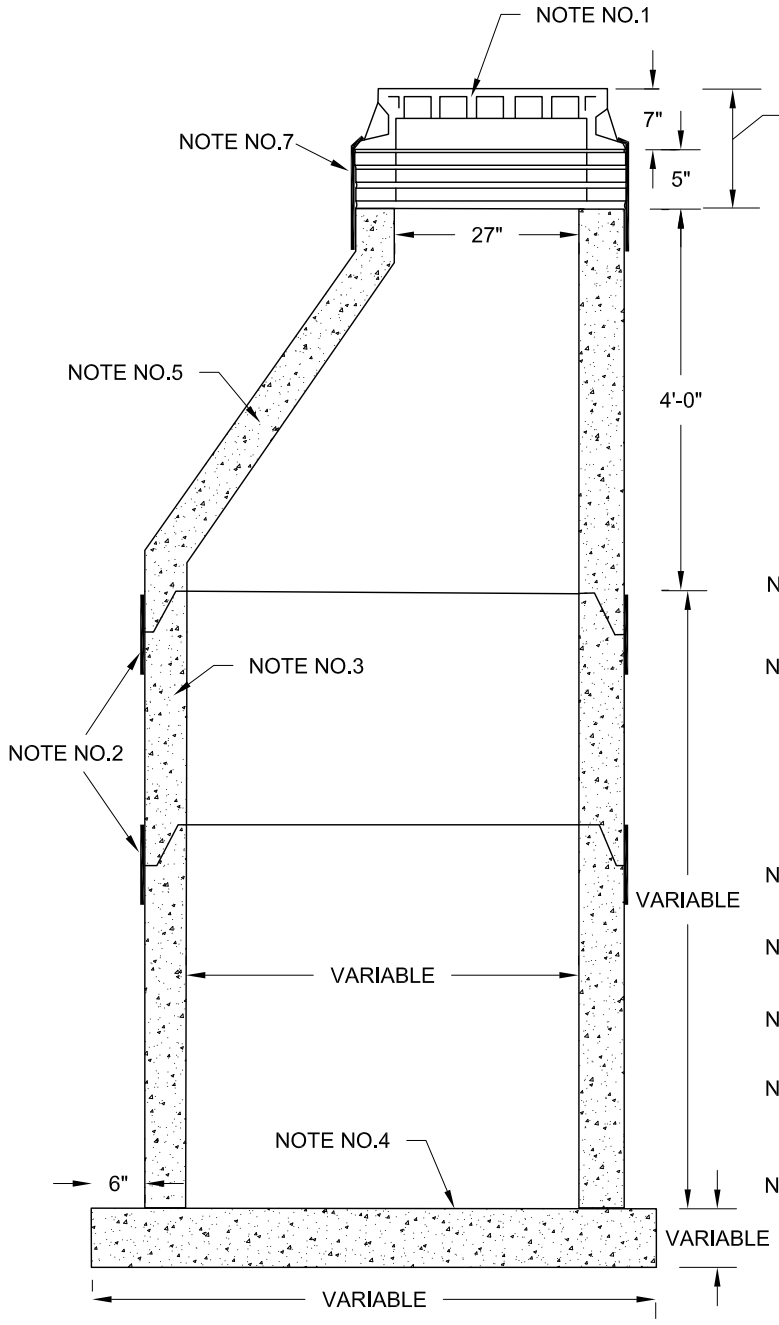

RECOMMENDED PRECAST SIZE REQUIREMENTS

BARREL DIAMETER	MAXIMUM SIZE RCP		
	2 @ 90	2 @ 180	RCP
48"	15"	30"	33"
54"	18"	36"	36"
60"	21"	42"	42"
66"	24"	48"	48"
72"	30"	48"	48"

NOTE NO.1 - MANHOLE CASTING SHALL BE AS DEFINED IN SECTION 1205-2.5.

NOTE NO.2 - CRETEX P2 GASKETED JOINT FOR 48" MANHOLES, CRETEX CX-4 JOINT FOR ALL OTHER SIZES OF MANHOLES OR EXTERIOR SEAL BY PRESS-SEAL GASKET CORP. EZ WRAP AND EZ STIK NO. 4 PRIMER, CRETEX SPECIALTY PRODUCTS "MAC WRAP", OR AN APPROVED EQUAL.

NOTE NO.3 - PRECAST CONCRETE MANHOLE SHALL CONFORM TO ASTM C478, WALL B.

NOTE NO.4 - PRECAST REINFORCED CONCRETE MANHOLE BASES SHALL CONFORM TO SECTION 1205-2.9.

NOTE NO.5 - MANHOLE TOP SECTION SHALL BE ECCENTRIC FOR 48" MANHOLES

NOTE NO.7 - EXTERNAL MANHOLE CHIMNEY SEAL AS MANUFACTURED BY CRETEX OR AN APPROVED EQUAL., IF SPECIFIED.

NOTE NO.8 - STEPS SHALL NOT BE PLACED IN SANITARY SEWER, STORM SEWER OR AIR RELEASE MANHOLES OR INLETS UNLESS SPECIFIED. IF SPECIFIED, THE MANHOLE STEPS SHALL BE DELTA SUREFOOT OR APPROVED EQUAL. STEPS SHALL BE SPACED 16" ON CENTER.

STORM SEWER MANHOLE

Bismarck Engineering Department	Melvin J. Bullinger, P.E., City Engineer	SCALE: Not to Scale DATE: 3/2012	STANDARD DETAIL NO. 1205-3

NOTE NO.1 - MANHOLE CASTING AND COVER SHALL BE AS DEFINED IN SECTION 1205-2.5.

NOTE NO.2 - EXTERIOR SEAL BY PRESS-SEAL GASKET CORP. EZ WRAP AND EZ STIK NO. 4 PRIMER, CRETEX SPECIALTY PRODUCTS "MAC WRAP", OR AN APPROVED EQUAL.

NOTE NO.3 - EXTERNAL MANHOLE CHIMNEY SEAL AS MANUFACTURED BY CRETEX OR AN APPROVED EQUAL, IF SPECIFIED.

NOTE NO.4 - STEPS SHALL NOT BE PLACED IN SANITARY SEWER, STORM SEWER OR AIR RELEASE MANHOLES OR INLETS UNLESS SPECIFIED. IF SPECIFIED, THE MANHOLE STEPS SHALL BE DELTA SUREFOOT OR APPROVED EQUAL. STEPS SHALL BE SPACED 16" ON CENTER.

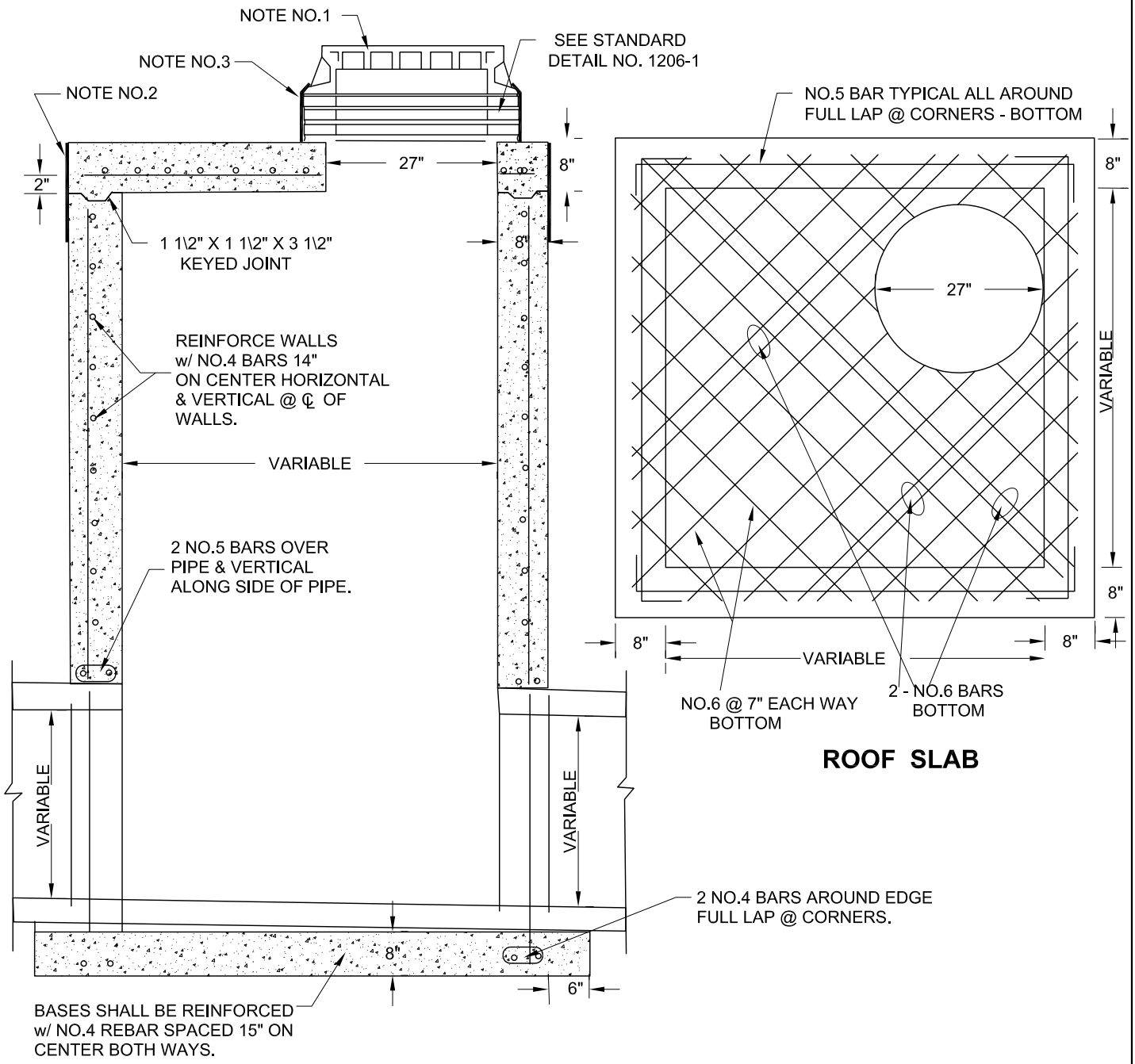

CAST IN PLACE STORM SEWER MANHOLE

Bismarck Engineering Department	Melvin J. Bullinger, P.E., City Engineer	SCALE: Not to Scale DATE: 3/2012	STANDARD DETAIL NO. 1205-4

NOTE NO.1 - INLET CASTING SHALL BE AS DEFINED IN SECTION 1205-2.6.

NOTE NO.2 - ALLOWANCE FOR ADJUSTMENT SHALL BE 1 1/2" MINIMUM TO 3" MAXIMUM. SEE STANDARD DETAIL NO.1206-1.

NOTE NO.3 - CRETEX P2 GASKETED JOINT FOR 48" MANHOLES, CRETEX CX-4 JOINT FOR ALL OTHER SIZES OF MANHOLES OR EXTERIOR SEAL BY PRESS-SEAL GASKET CORP. EZ WRAP AND EZ STIK NO. 4 PRIMER, CRETEX SPECIALTY PRODUCTS "MAC WRAP", OR AN APPROVED EQUAL.

NOTE NO.4 - USE PRECAST SECTION FOR THREE PIPES OR LESS UP TO 15" DIAMETER. FOR MORE THAN THREE PIPES OR FOR LARGER PIPES, A SECTION SHALL BE POURED IN PLACE ALLOWING A MINIMUM OF 3" FROM THE BOTTOM OF THE ROOF SLAB TO THE LARGEST OR HIGHEST PIPE. SEE STANDARD DETAIL NO. 1205-4 FOR ROOF SLAB, BASE & OTHER DIMENSIONS.

NOTE NO.5 - BOLTS FOR CASTING SHALL BE TEMPER FINISH, DOUBLE HEAT TREATED-1038 S.A.E. GRADE 5, WITH CAD-DICHROMATE PLATING.

NOTE NO.6 - SLOPE FLOOR TO INVERT OF LOWEST PIPE.

NOTE NO.7 - EXTERNAL MANHOLE CHIMNEY SEAL AS MANUFACTURED BY CRETEX OR AN APPROVED EQUAL, IF SPECIFIED.

NOTE NO.8 - STEPS SHALL NOT BE PLACED IN SANITARY SEWER, STORM SEWER OR AIR RELEASE MANHOLES OR INLETS UNLESS SPECIFIED. IF SPECIFIED, THE MANHOLE STEPS SHALL BE DELTA SUREFOOT OR APPROVED EQUAL. STEPS SHALL BE SPACED 16" ON CENTER.

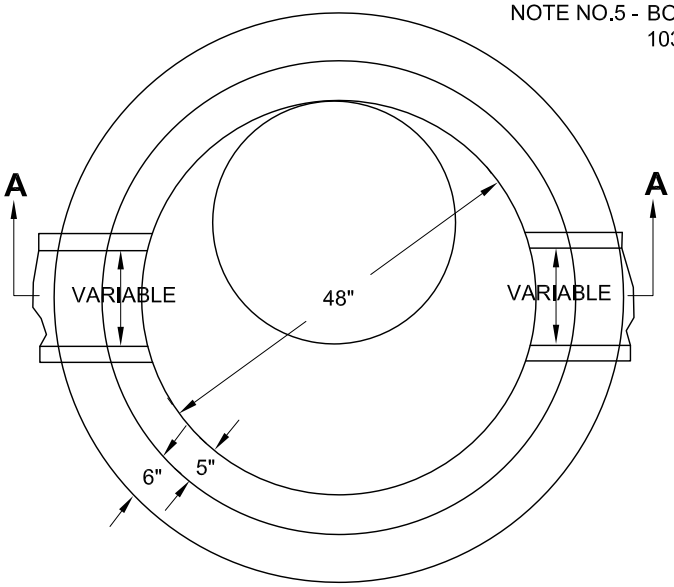

SECTION B-B

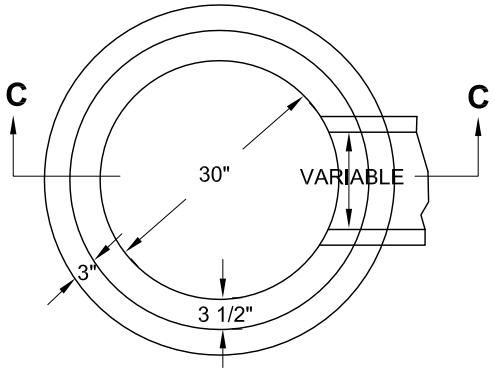

SECTION D-D

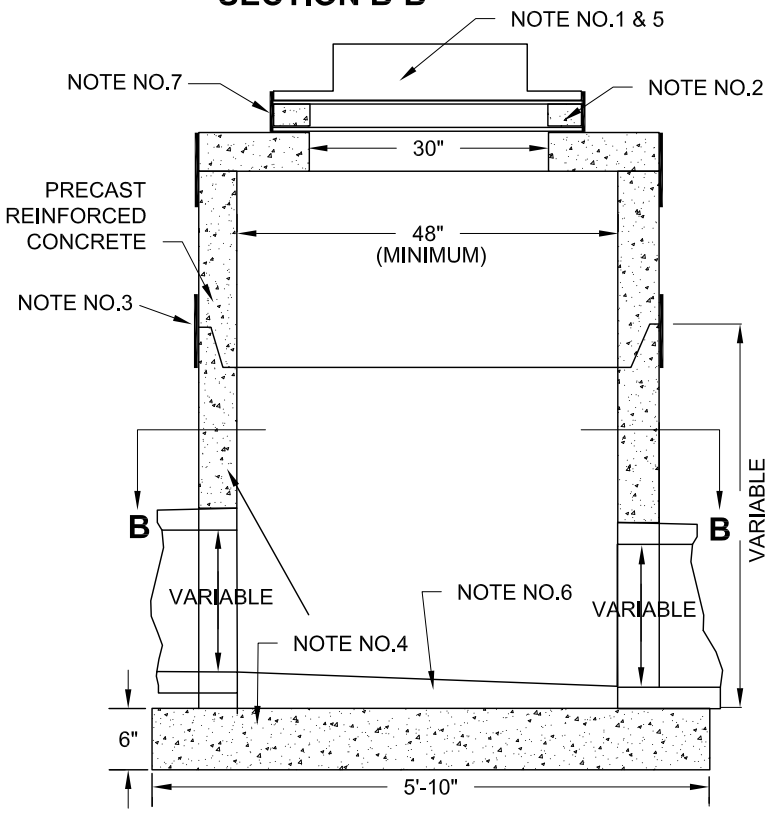

SECTION A-A
TYPE 24" INLET/MANHOLE

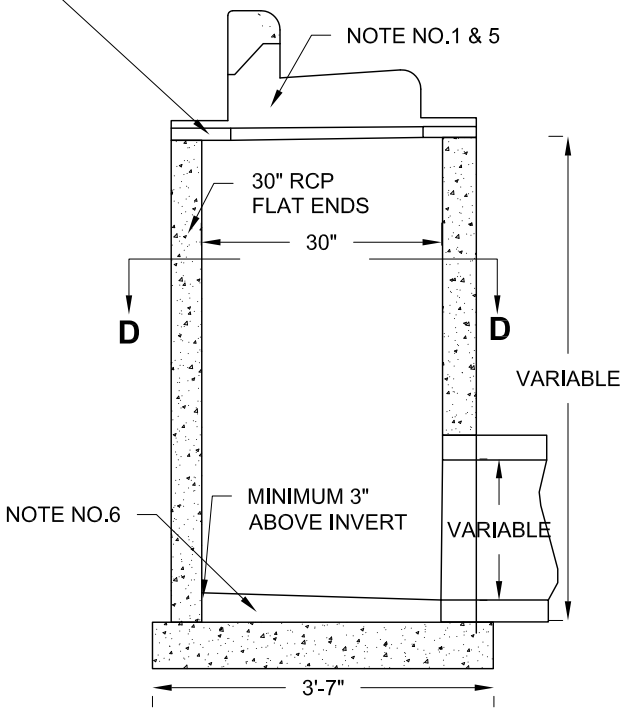

SECTION C-C
TYPE 24" INLET

TYPE 24" INLET/MANHOLE & TYPE 24" INLET

Bismarck Engineering Department	Melvin J. Bullinger, P.E., City Engineer	SCALE: Not to Scale DATE: 3/2012	STANDARD DETAIL NO. 1205-5

NOTE NO.1 - TYPE 36" INLET CASTING SHALL BE AS DEFINED IN SECTION 1205-2.6.
TYPE 72" INLET CASTING SHALL BE AS DEFINED IN SECTION 1205-2.6.

NOTE NO.2 - ALLOWANCE FOR ADJUSTMENT SHALL BE 1 1/2" MINIMUM TO 3" MAXIMUM. SEE STANDARD DETAIL NO.1206-1.

NOTE NO.3 - WHEN THE O.D. OF THE PIPE EXCEEDS THE DIMENSIONS SHOWN FOR TYPE 'B' OR TYPE 'C' INLETS, THE INLET WALLS SHALL BE POURED FLUSH WITH THE OUTSIDE WALLS OF THE PIPE. THE ROOF SLAB SHALL BE CONSTRUCTED AS DETAILED IN SECTION C-C BELOW.

NOTE NO.4 - ALL BARS SHALL BE NO.5 DEFORMED REINFORCING BARS SPACED 6" CENTER TO CENTER BOTH WAYS.

NOTE NO.5 - BOLTS FOR CASTING SHALL BE TEMPER FINISH,DOUBLE HEAT TREATED-1038 S.A.E. GRADE 5, WITH CAD-DICHROMATE PLATING.

NOTE NO.6 - STEPS SHALL NOT BE PLACED IN SANITARY SEWER, STORM SEWER OR AIR RELEASE MANHOLES OR INLETS UNLESS SPECIFIED. IF SPECIFIED, THE MANHOLE STEPS SHALL BE DELTA SUREFOOT OR APPROVED EQUAL. STEPS SHALL BE SPACED 16" ON CENTER.

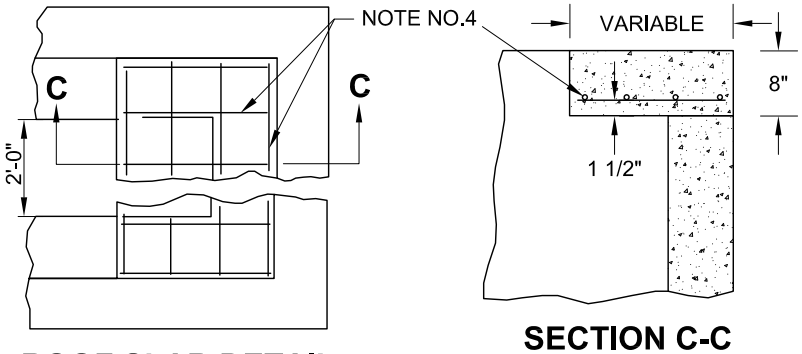

ROOF SLAB DETAIL

SECTION C-C

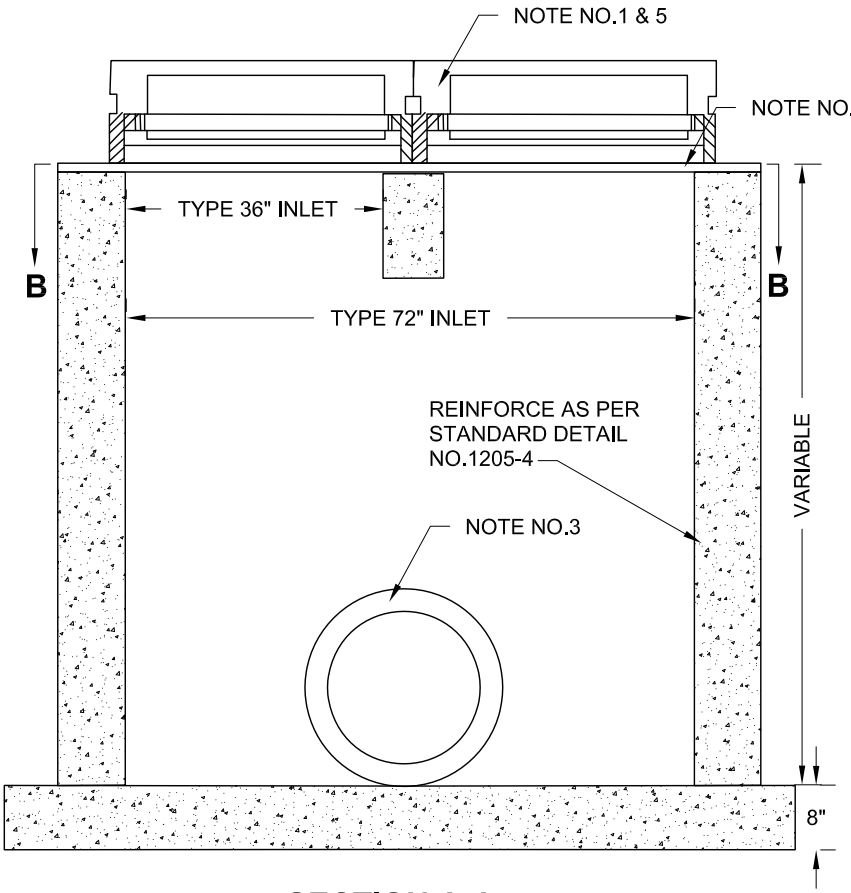

SECTION A-A

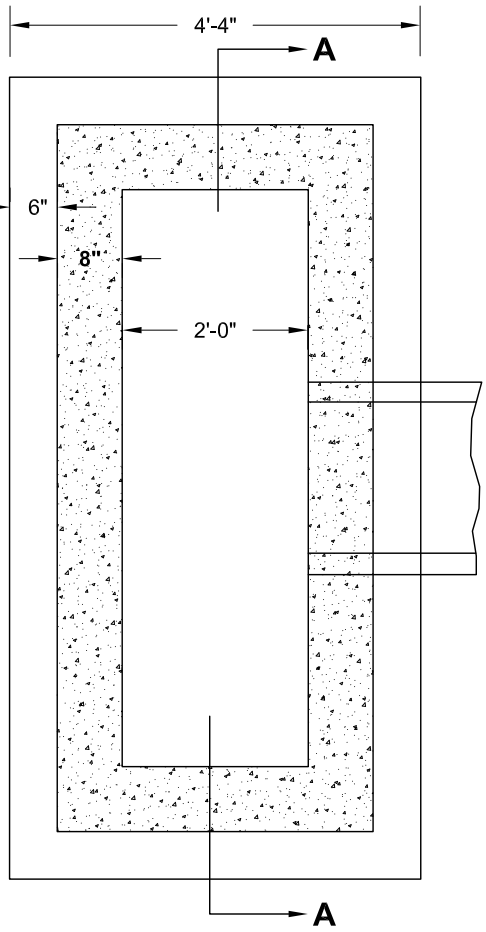

SECTION B-B

TYPE 36" AND TYPE 72" INLETS (SHEET 1 OF 2)

Bismarck Engineering Department	Melvin J. Bullinger, P.E., City Engineer	SCALE: Not to Scale DATE: 3/2012	STANDARD DETAIL NO. 1205-6

NOTE NO.1 - TYPE 36" INLET CASTING SHALL BE AS DEFINED IN SECTION 1205-2.6.
TYPE 72" INLET CASTING SHALL BE AS DEFINED IN SECTION 1205-2.6.

NOTE NO.2 - ALLOWANCE FOR ADJUSTMENT SHALL BE 1 1/2" MINIMUM TO 3" MAXIMUM. SEE STANDARD DETAIL NO.1206-1.

NOTE NO.3 - REINFORCED CONCRETE ROOF SLAB MAY BE PRECAST OR CAST IN PLACE.

NOTE NO.4 - ALL BARS SHALL BE NO.5 DEFORMED REINFORCING BARS SPACED 6" CENTER TO CENTER BOTH WAYS.

NOTE NO.5 - BOLTS FOR CASTING SHALL BE TEMPER FINISH,DOUBLE HEAT TREATED-1038 S.A.E. GRADE 5, WITH CAD-DICHROMATE PLATING.

NOTE NO.6 - STEPS SHALL NOT BE PLACED IN SANITARY SEWER, STORM SEWER OR AIR RELEASE MANHOLES OR INLETS UNLESS SPECIFIED. IF SPECIFIED, THE MANHOLE STEPS SHALL BE DELTA SUREFOOT OR APPROVED EQUAL. STEPS SHALL BE SPACED 16" ON CENTER.

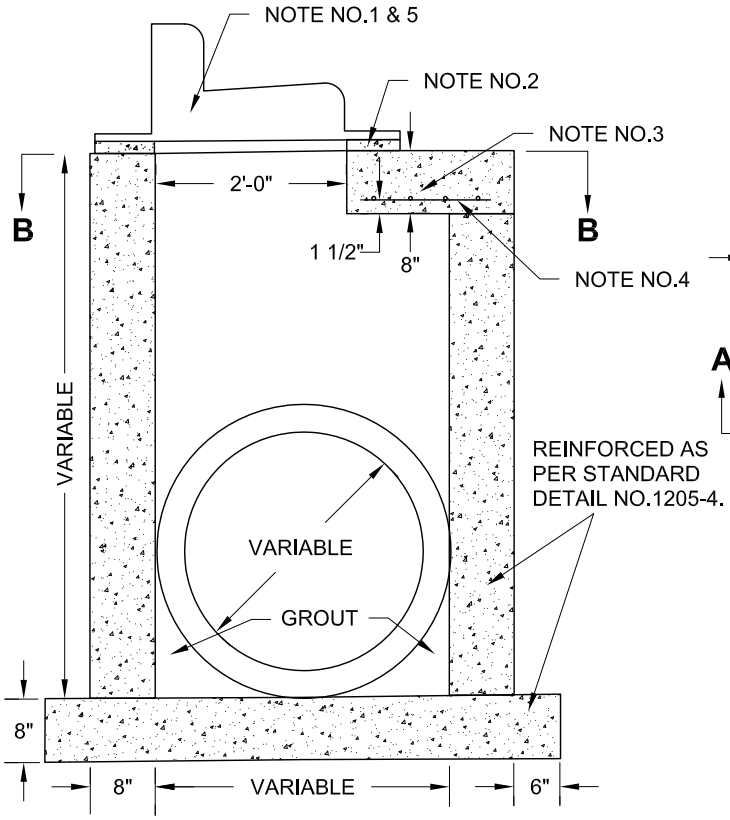

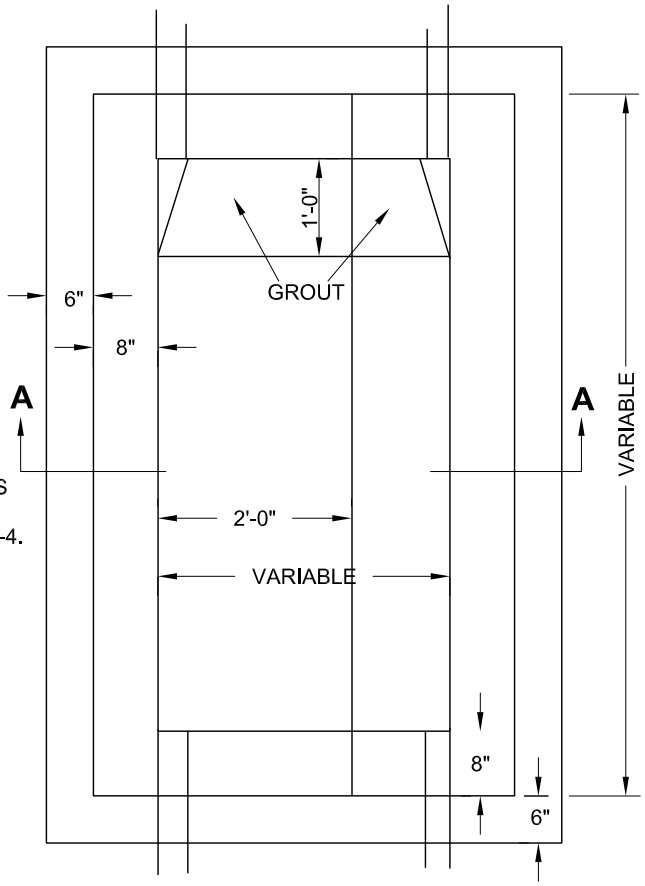

TYPE 36" AND TYPE 72" INLET (SHEET 2 OF 2)

Bismarck Engineering Department	Melvin J. Bullinger, P.E., City Engineer	SCALE: Not to Scale DATE: 3/2012	STANDARD DETAIL NO. 1205-7

NOTE NO.1 - INLET CASTING SHALL BE AS DEFINED IN SECTION 1205-2.6.

NOTE NO.2 - ALLOWANCE FOR ADJUSTMENT SHALL BE 1 1/2" MINIMUM TO 3" MAXIMUM. SEE STANDARD DETAIL NO.1206-1.

NOTE NO.3 - ALL BARS SHALL BE NO.5 DEFORMED REINFORCING BARS. AT LEAST TWO BARS SHALL BE PLACED 3" CENTER TO CENTER AROUND THE INLET OPENING. ALL OTHER BARS SHALL BE SPACED 6" CENTER TO CENTER BOTH WAYS.

NOTE NO.4 - REINFORCED CONCRETE ROOF SLAB MAY BE PRECAST OR CAST IN PLACE.

NOTE NO.5 - BOLTS FOR CASTING SHALL BE TEMPER FINISH,DOUBLE HEAT TREATED-1038 S.A.E. GRADE 5, WITH CAD-DICHROMATE PLATING.

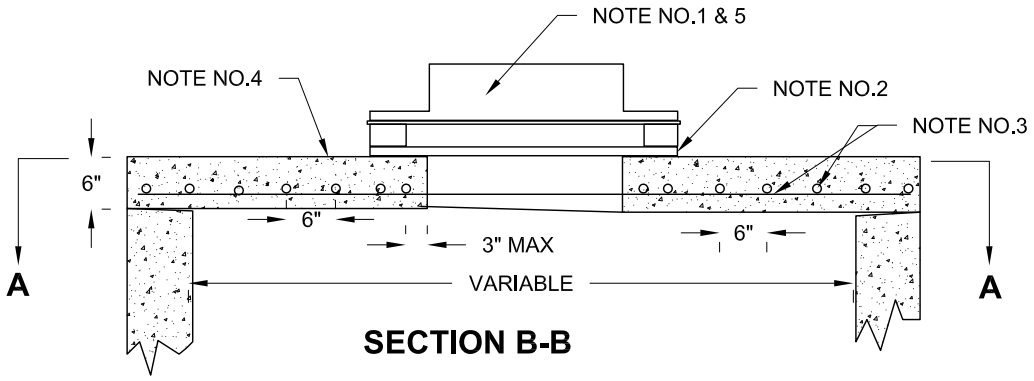

SECTION B-B

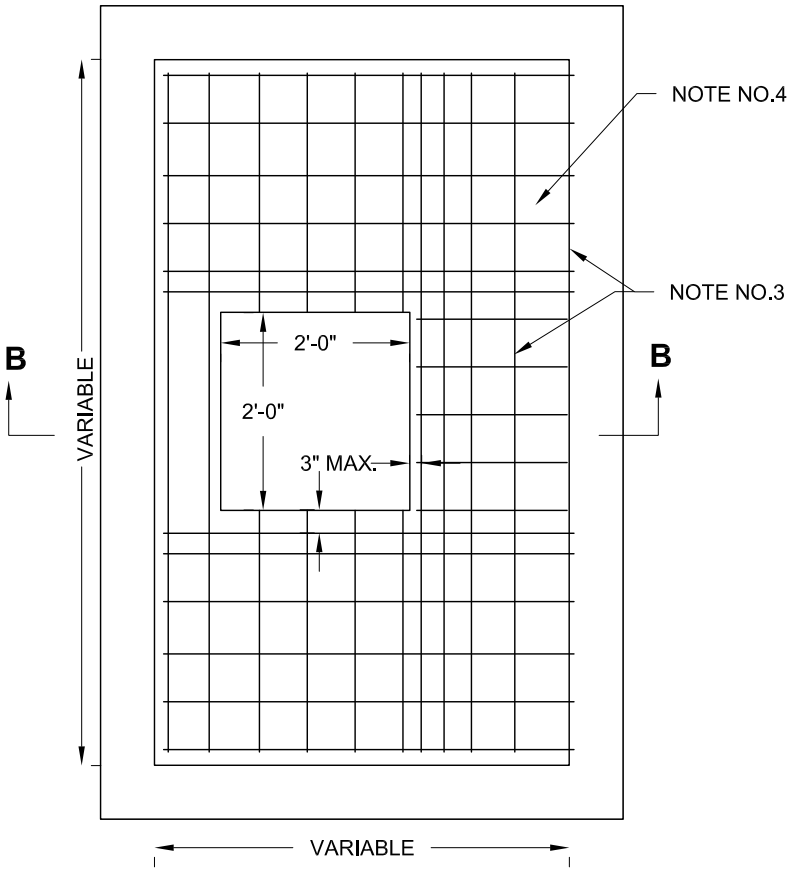

SECTION A-A

ROOF SLAB FOR TYPE 36" & 72" INLET W/ TYPE 24" CASTING

Bismarck Engineering Department	Melvin J. Bullinger, P.E., City Engineer	SCALE: Not to Scale DATE: 3/2012	STANDARD DETAIL NO. **1205-8**

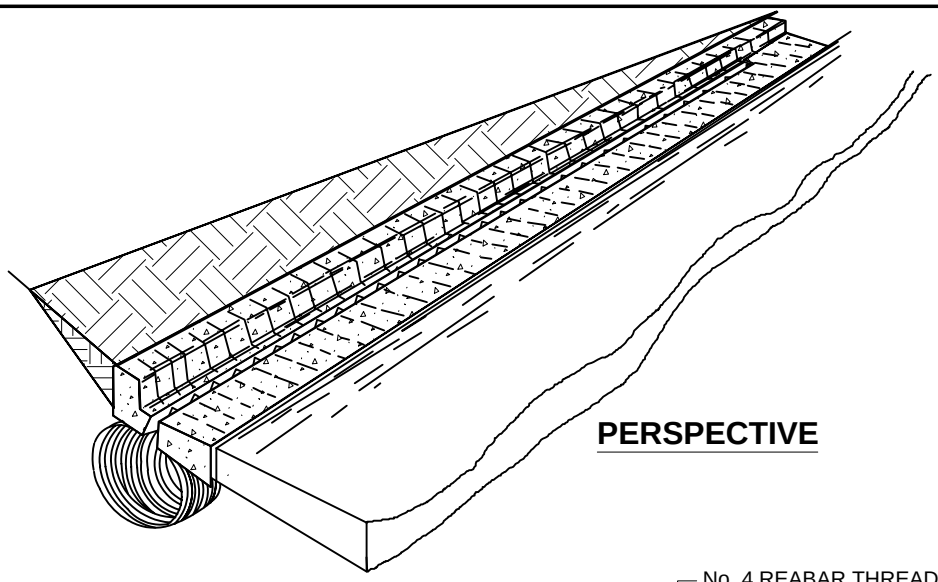

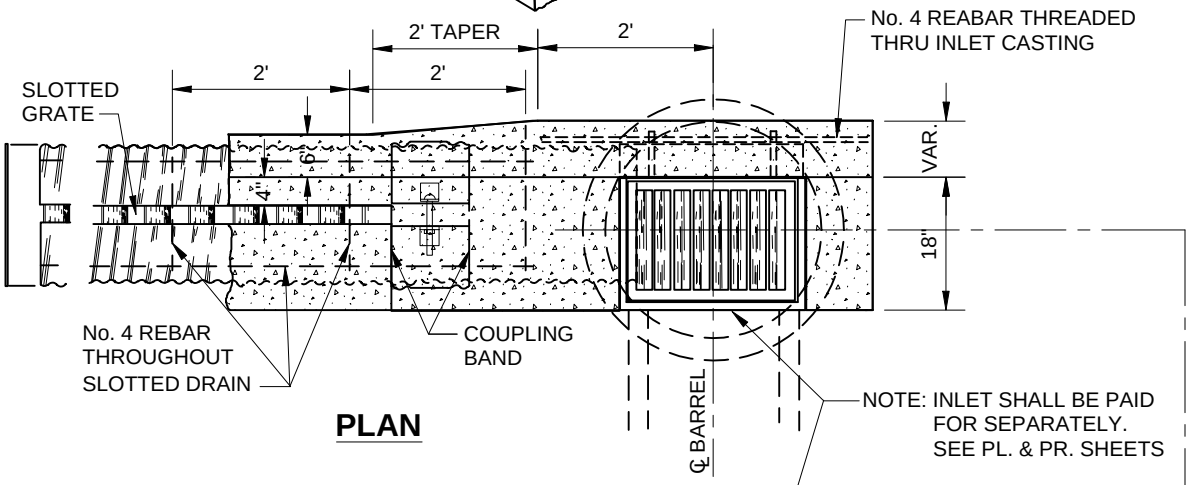

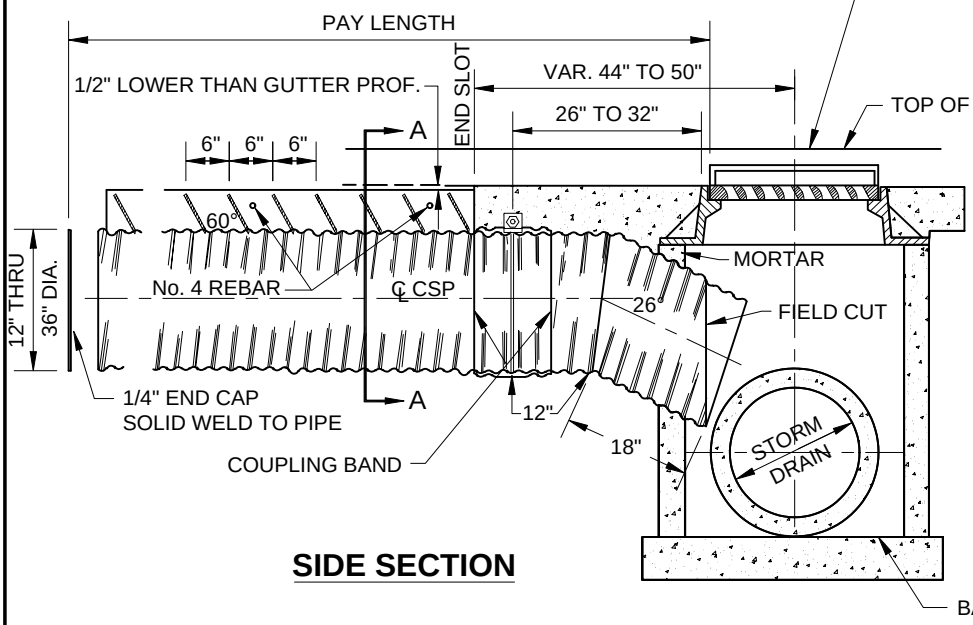

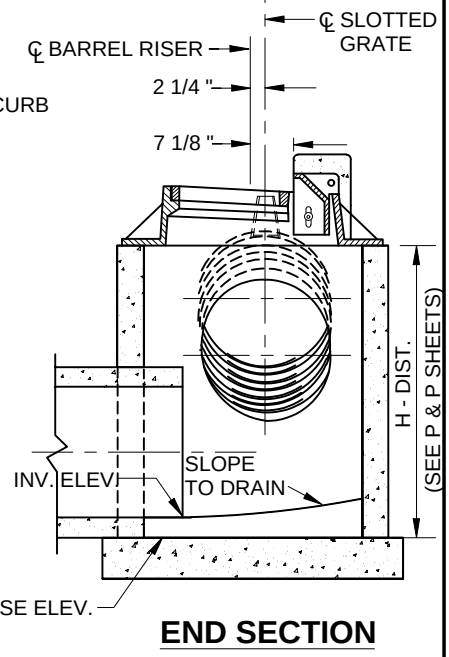

SLOTTED DRAIN INLET 1 (SHEET 1 OF 2)

Bismarck Engineering Department	Melvin J. Bullinger, P.E., City Engineer	SCALE: Not to Scale DATE: 1/2003	STANDARD DETAIL NO. 1205-9

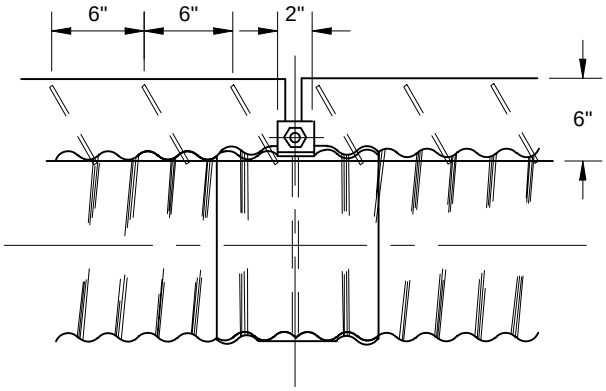

SIDE VIEW

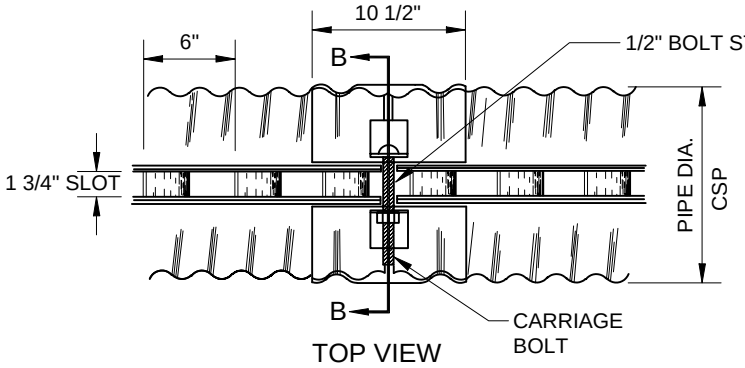

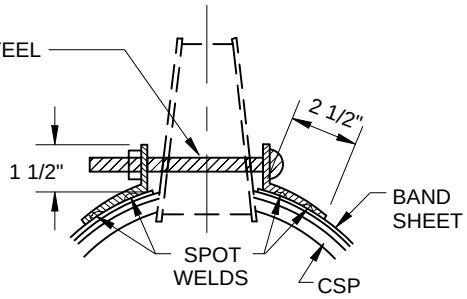

SECTION B-B

TYPICAL COUPLING BAND

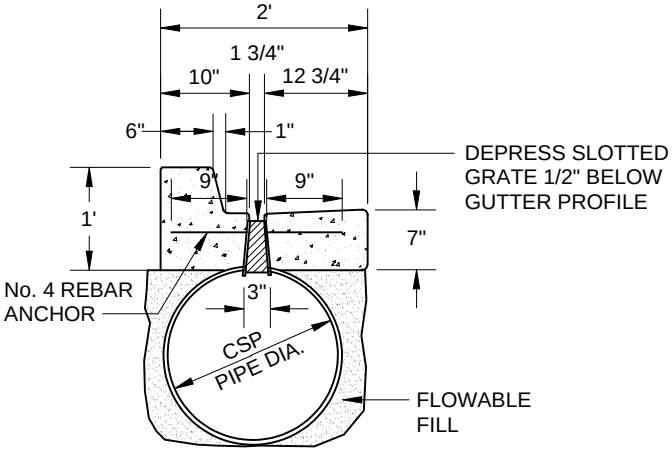

SECTION A-A

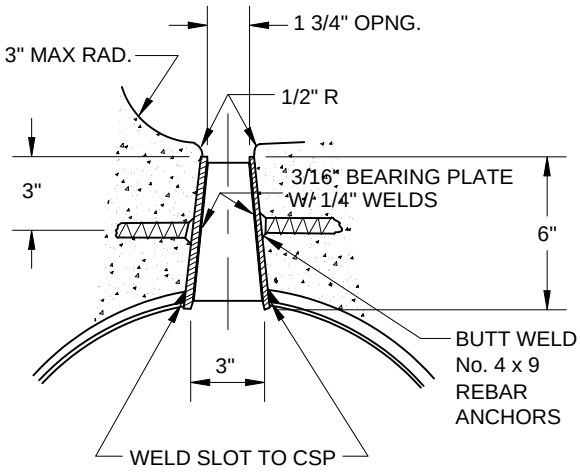

TYPICAL SECTION

SLOTTED DRAIN INLET 2 (SHEET 2 OF 2)

Bismarck Engineering Department	Melvin J. Bullinger, P.E., City Engineer	SCALE: Not to Scale DATE: 1/2003	STANDARD DETAIL NO. 1205-10

NOTE NO.1 - MANHOLE CASTING AND COVER SHALL BE AS DEFINED IN SECTION 1205-2.6.

NOTE NO.2 - CRETEX 48" TYPE II COVER

NOTE NO.3 - MANHOLE CASTING ADJUSTMENT - SEE STANDARD DETAIL NO. 1206-1.

NOTE NO.4 - 2" STYROFOAM INSULATION SHALL BE AS DEFINED IN SECTION 901-3.13 INSTALLED AROUND THE OUTSIDE OF THE TOP 4 FEET OF THE MANHOLE AND HELD IN PLACE BY BANDS OR GLUE UNTIL BACKFILLED.

NOTE NO.5 - CRETEX P2 GASKETED JOINT FOR 48" MANHOLES, CRETEX CX-4 JOINT FOR ALL OTHER SIZES OF MANHOLES OR EXTERIOR SEAL BY PRESS-SEAL GASKET CORP. EZ WRAP AND EZ STIK NO. 4 PRIMER, CRETEX SPECIALTY PRODUCTS "MAC WRAP", OR AN APPROVED EQUAL.

NOTE NO.6 - INSTALL 2" STYROFOAM INSULATION AS DEFINED IN SECTION 901-3.13 GLUED TO THE BOTTOM OF THE PRECAST COVER.

NOTE NO.7 - 2" OPENING SHALL BE LEFT AROUND PIPE AND FILLED WITH KENTSEAL OR AN APPROVED EQUAL.

NOTE NO.8 - 1" AUTOMATIC AIR RELEASE VALVE - SEE SECTION 1205-2.10

NOTE NO.9 - SEAL WITH KENTSEAL OR AN APPROVED EQUAL.

NOTE NO.10 - SEE SECTION 1205-2.9 FOR PRECAST MANHOLE BASE REINFORCEMENT.

NOTE NO.11 - EXTERNAL MANHOLE CHIMNEY SEAL AS MANUFACTURED BY CRETEX OR AN APPROVED EQUAL, IF SPECIFIED.

NOTE NO.12 - STEPS SHALL NOT BE PLACED IN SANITARY SEWER, STORM SEWER OR AIR RELEASE MANHOLES OR INLETS UNLESS SPECIFIED. IF SPECIFIED, THE MANHOLE STEPS SHALL BE DELTA SUREFOOT OR APPROVED EQUAL. STEPS SHALL BE SPACED 16" ON CENTER.

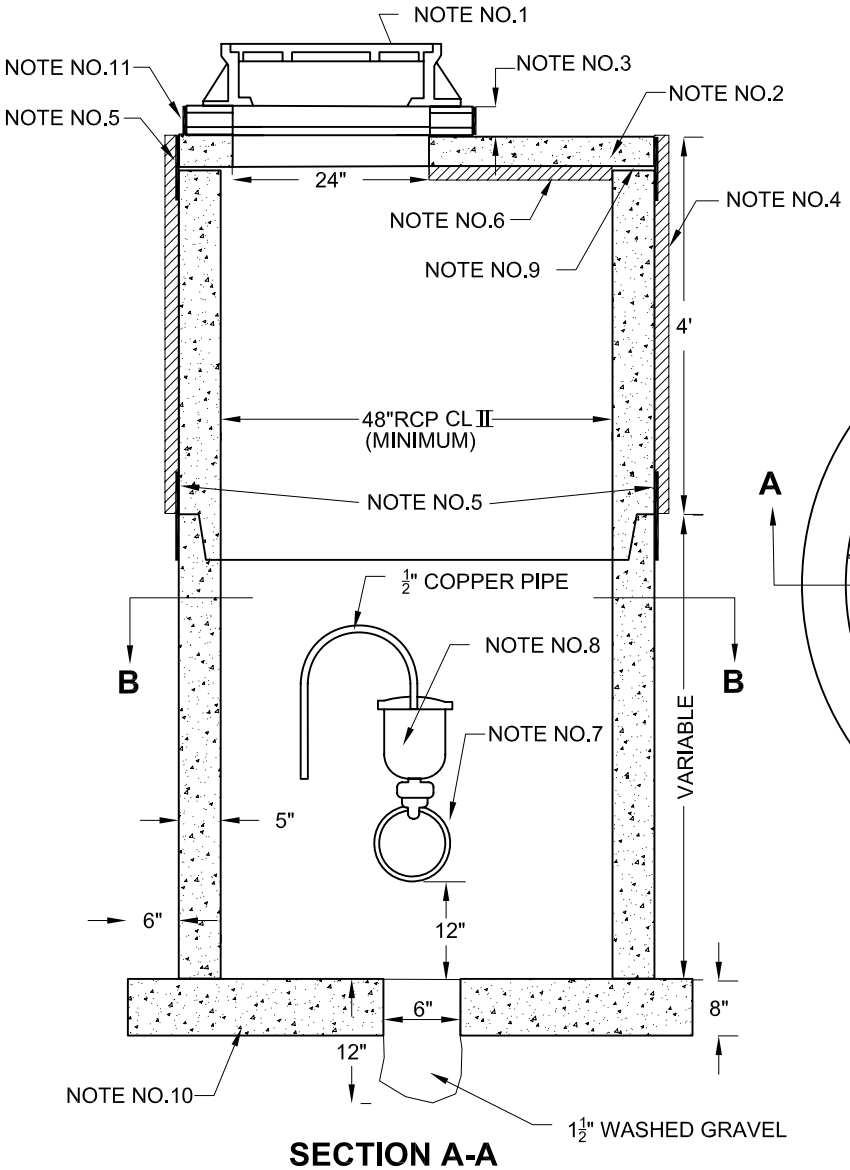

SECTION A-A

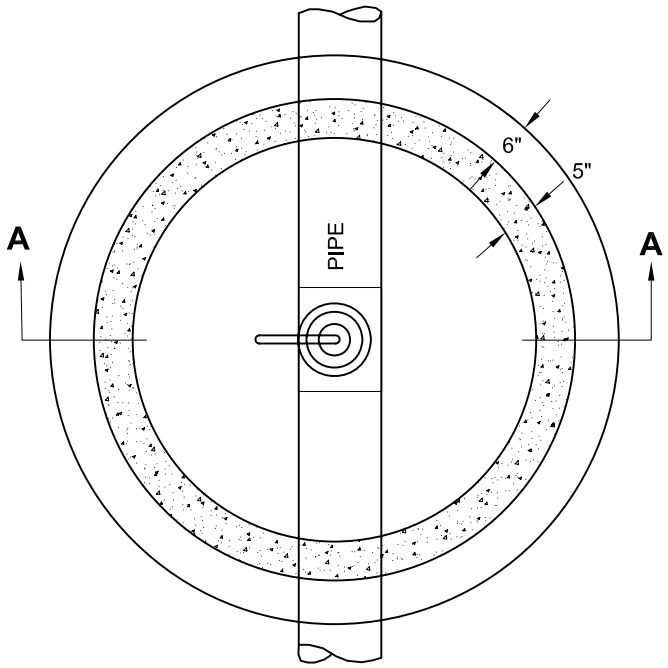

SECTION B-B

AIR RELEASE MANHOLE

Bismarck Engineering Department	Melvin J. Bullinger, P.E., City Engineer	SCALE: Not to Scale DATE: 4/2007	STANDARD DETAIL NO. 1205-11

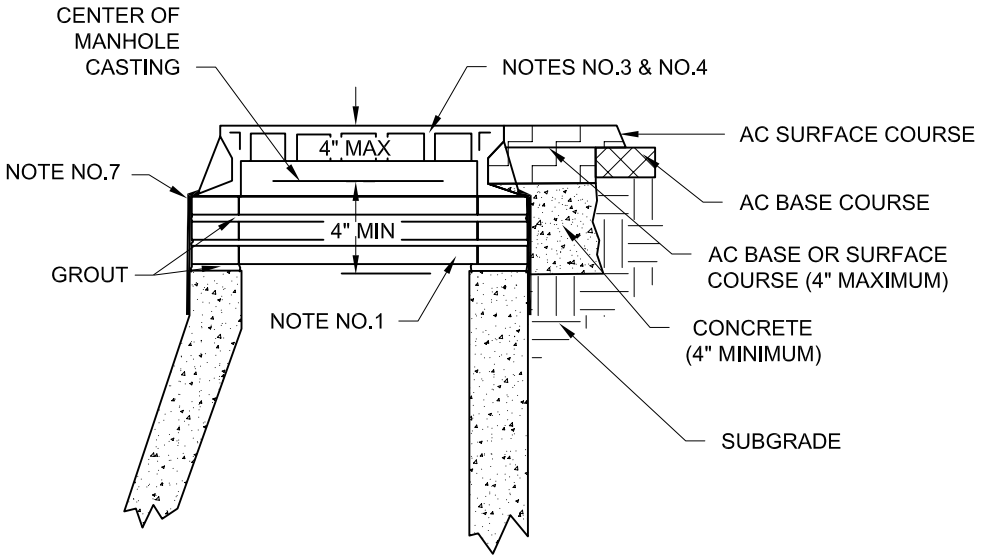

MANHOLE CASTING STANDARD ADJUSTMENT

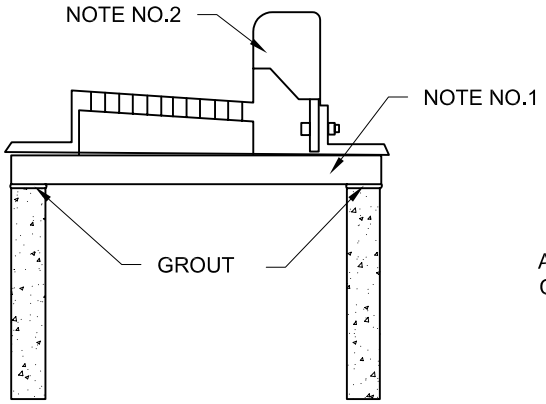

INLET STANDARD ADJUSTMENT

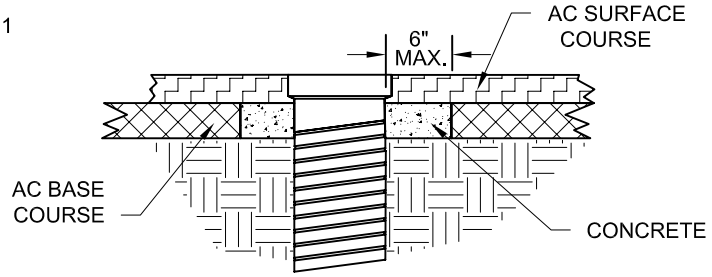

VALVE BOX ADJUSTMENT

NOTE NO.1 - USE PRECAST CONCRETE ADJUSTING RINGS FOR ADJUSTMENT OF MANHOLES AND TYPE 24" INLET AND TYPE 24" INLET/ MANHOLE. USE CONCRETE BLOCKS FOR ADJUSTMENT OF TYPE 36" AND TYPE 72" INLETS. GROUT SHALL BE PLACED BETWEEN ALL SURFACES. GROUT ON THE INSIDE EDGE OF ADJUSTING RINGS SHALL HAVE A SMOOTH FINISH.

NOTE NO.2 - INLET BACK SHALL BE ADJUSTED TO CONFORM WITH CURB & GUTTER GRADES AND CURB ALIGNMENT.

NOTE NO.3 - MANHOLE CASTING SHALL BE ADJUSTED TO CONFORM WITH SLOPE AND GRADE OF PROPOSED CONCRETE OR PAVEMENT.

NOTE NO.4 - MANHOLE CASTING SHALL BE ADJUSTED AFTER THE AC LEVELING COURSE OR THE AC BASE COURSE HAS BEEN PLACED.

NOTE NO.5 - INLET AND MANHOLE CASTINGS SHALL BE CONSIDERED ADJUSTED ONLY WHEN RAISED OR LOWERED BY ADDING OR REMOVING ADJUSTING RINGS OR GROUT.

NOTE NO.6 - ADAPTOR RING SHALL BE AMERICAN HIGHWAY PRODUCTS MANHOLE RISER OR AN APPROVED EQUAL.

NOTE NO.7 - EXTERIOR MANHOLE CHIMNEY SEAL AS MANUFACTURED BY CRETEX OR AN APPROVED EQUAL, IF SPECIFIED.

MANHOLE , INLET & VALVE BOX ADJUSTMENT

Bismarck Engineering Department	Melvin J. Bullinger, P.E., City Engineer	SCALE: Not to Scale DATE: 4/2007	STANDARD DETAIL NO. 1206-1

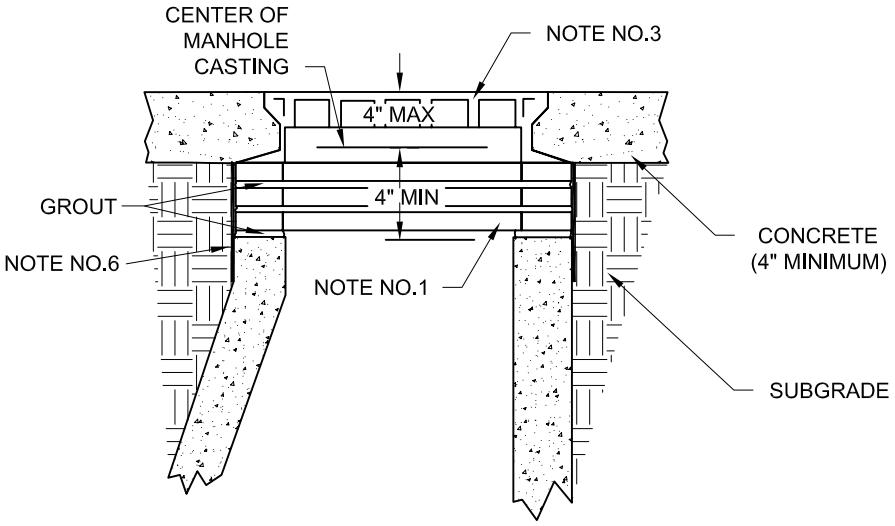

MANHOLE CASTING STANDARD ADJUSTMENT

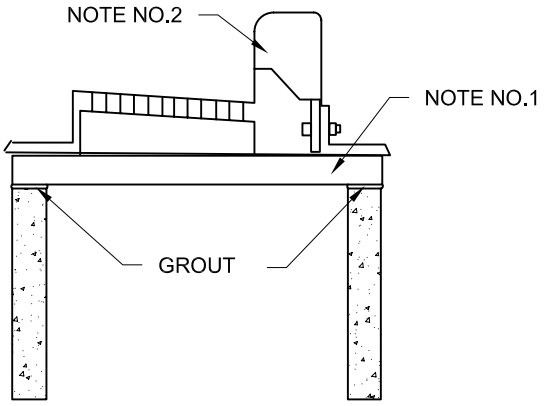

INLET STANDARD ADJUSTMENT

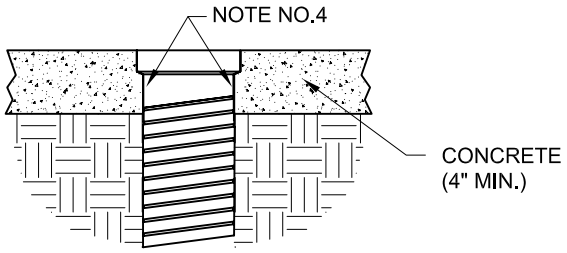

VALVE BOX ADJUSTMENT

NOTE NO.1 - USE PRECAST CONCRETE ADJUSTING RINGS FOR ADJUSTMENT OF MANHOLES AND TYPE 24" INLET AND TYPE 24" INLET/ MANHOLE. USE CONCRETE BLOCKS FOR ADJUSTMENT OF TYPE 36" AND TYPE 72" INLETS. GROUT SHALL BE PLACED BETWEEN ALL SURFACES. GROUT ON THE INSIDE EDGE OF ADJUSTING RINGS SHALL HAVE A SMOOTH FINISH.

NOTE NO.2 - INLET BACK SHALL BE ADJUSTED TO CONFORM WITH CURB & GUTTER GRADES AND CURB ALIGNMENT.

NOTE NO.3 - MANHOLE CASTING SHALL BE ADJUSTED TO CONFORM WITH SLOPE AND GRADE OF PROPOSED CONCRETE OR PAVEMENT.

NOTE NO.4 - VALVES AND CURB STOP BOXES MUST BE WRAPPED IN ACCORDANCE WITH SECTION 1206-3.3

NOTE NO.5 - INLET AND MANHOLE CASTINGS SHALL BE CONSIDERED ADJUSTED ONLY WHEN RAISED OR LOWERED BY ADDING OR REMOVING ADJUSTING RINGS OR GROUT.

NOTE NO.6 - EXTERIOR MANHOLE CHIMNEY SEAL AS MANUFACTURED BY CRETEX OR AN APPROVED EQUAL, IF SPECIFIED.

MANHOLE , INLET & VALVE BOX ADJUSTMENT IN CONCRETE

Bismarck Engineering Department	Melvin J. Bullinger, P.E., City Engineer	SCALE: Not to Scale DATE: 4/2007	STANDARD DETAIL NO. 1206-2

EXTERIOR MANHOLE CHIMNEY SEAL AS MANUFACTURED BY CRETEX OR AN APPROVED EQUAL IF SPECIFIED.

NOTES: BED FRAME IN MORTAR, INSTALL PRECAST TWO-INCH RINGS, AND PLASTER INSIDE AND OUT WITH MORTAR.

INSTALLED COST AT EXISTING LOCATIONS SHALL BE INCLUDED IN PRICE BID FOR "ADJUST FLOATING MANHOLE CASTING", OR "FURNISH & ADJUST FLOATING MANHOLE CASTING".

INSTALLATION COST AT NEW MANHOLE LOCATIONS SHALL BE INCLUDED IN THE PRICE BID FOR "MANHOLES".

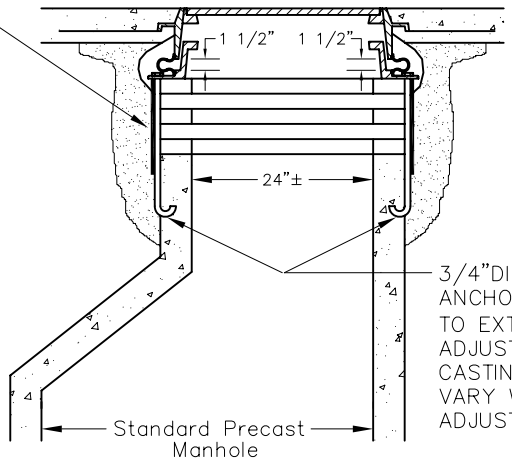

3/4"DIA. STAINLESS STEEL ANCHOR BOLTS WITH NUT, TO EXTEND 5" BELOW ADJUSTING RINGS, 4 PER CASTING. LENGTH MAY VARY WITH NO. OF ADJUSTING RINGS.

CROSS SECTION OF CONNECTION TO CONICAL MANHOLE - TYPICAL

FRAMES WHEN COMPRESSED ARE 11 1/2" IN HEIGHT. SET UPPER FRAME 1 1/2" ABOVE LOWER FRAME.

WHEN INSTALLING A BOX OUT INTO EXISTING PAVEMENT, DRILL 20" LONG NO.5 REBAR 6" DEEP – 15" O.C. SEE STD. DETAIL 1206-4

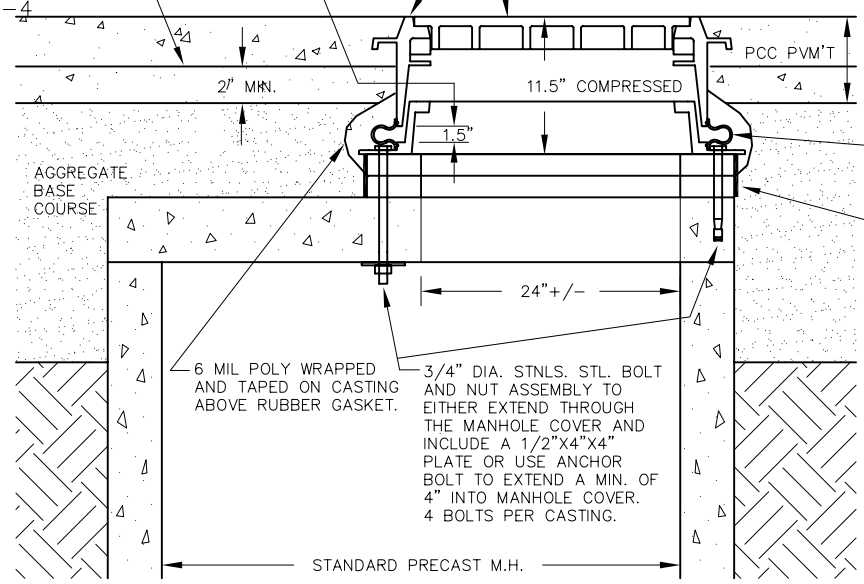

CROSS SECTION

FLOATING MANHOLE CASTING DETAIL (SHEET 1 OF 2)

Bismarck Engineering Department	Melvin J. Bullinger, P.E., City Engineer	SCALE: Not to Scale DATE: 4/2007	STANDARD DETAIL NO. 1206-3

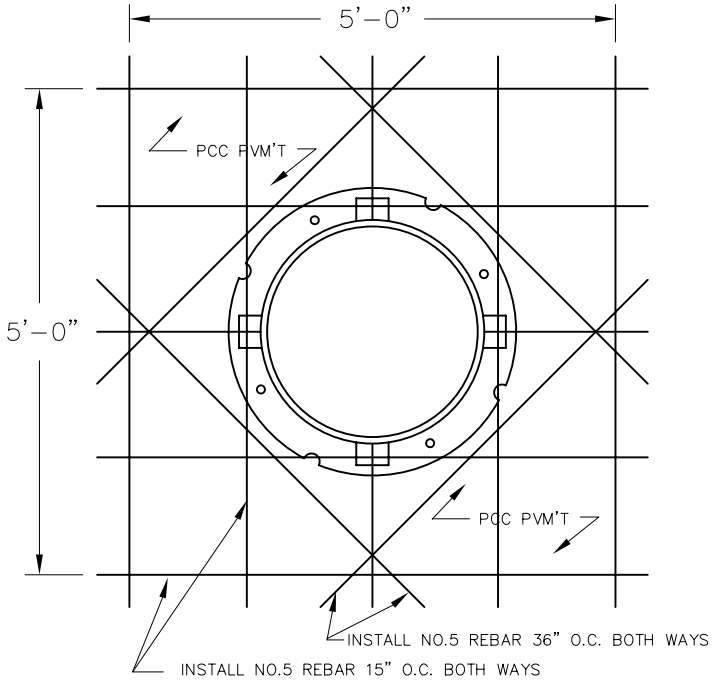

PLAN VIEW

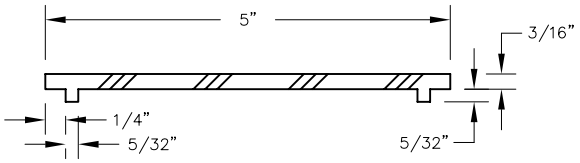

SECTION OF EXTRUDED NEOPRENE GASKET

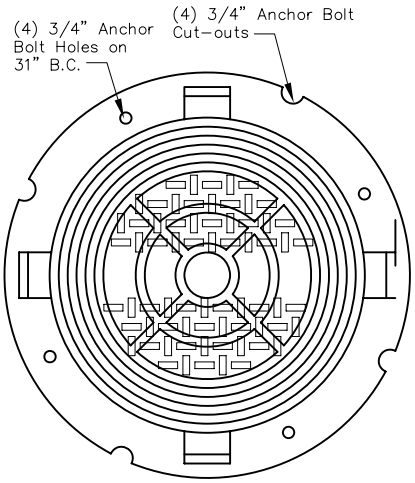

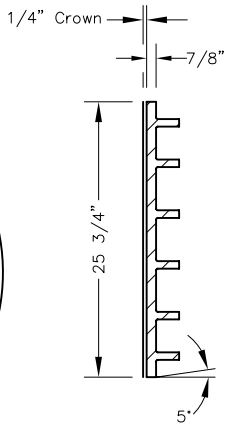

COMP. #'S LID 1733-078 207 Lbs
or
LID 1733-0716 109 Lbs

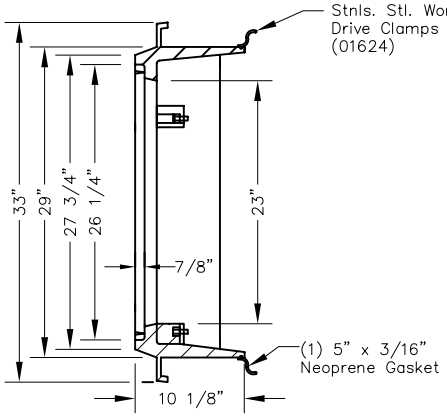

FR. 1955-0004
272 Lbs

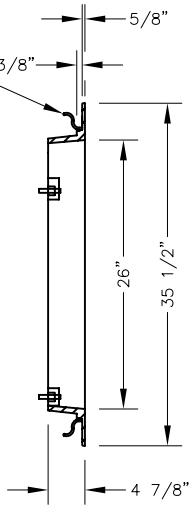

FR. 1955-0003
160 Lbs

MATERIAL: Cast Gray Iron ASTM A-48, Class 358
FINISH: Black Asphalt Emulsion
WEIGHT: 639#/Unit

FLOATING MANHOLE CASTING DETAIL - (SHEET 2 OF 2)

Bismarck Engineering Department	Melvin J. Bullinger, P.E., City Engineer	SCALE: Not to Scale DATE: 4/2007	STANDARD DETAIL NO. 1206-4

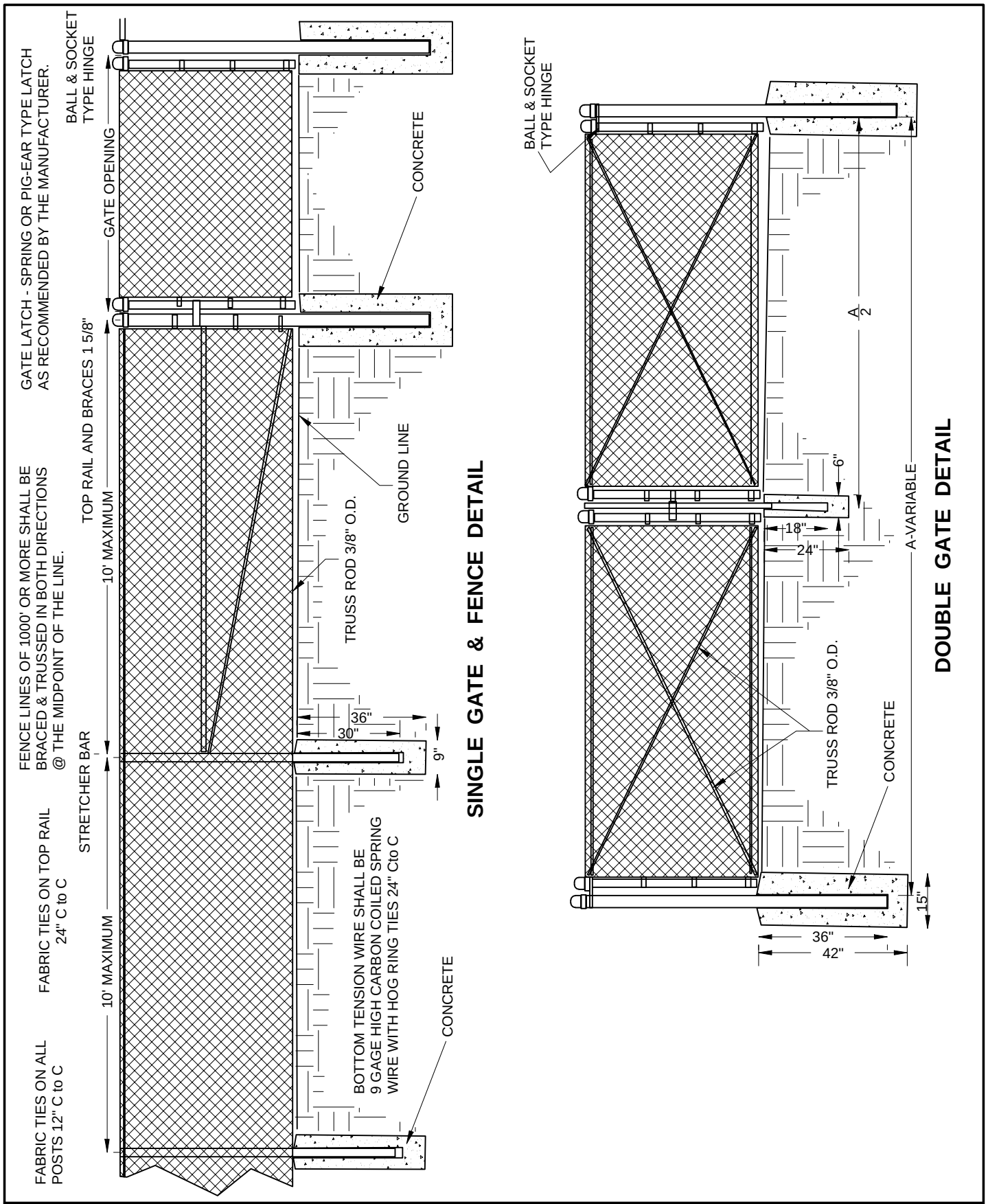

CHAIN LINK FENCE AND GATES

Bismarck *Engineering Department*	Melvin J. Bullinger, P.E., City Engineer	SCALE: Not to Scale DATE: 1/2003	STANDARD DETAIL NO. **1208-1**

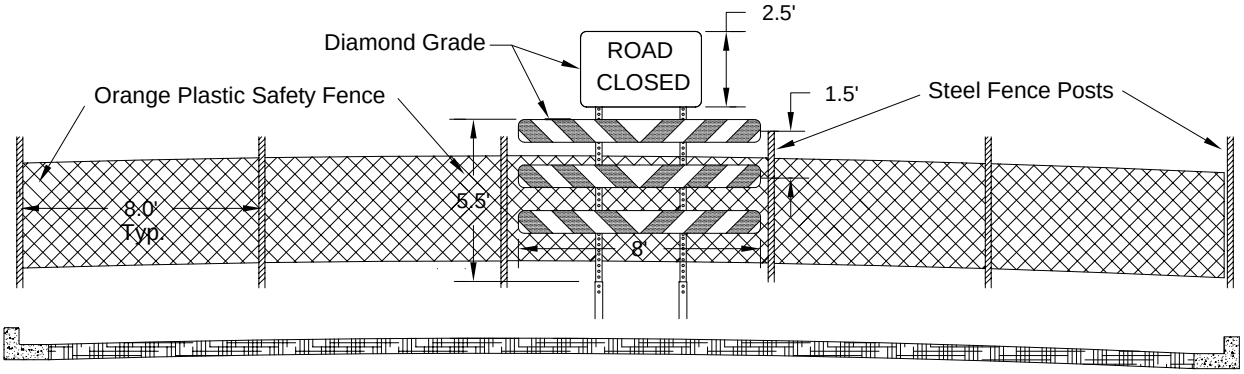

ROAD CLOSED TYPE III BARRICADE, FENCE DETAIL

Bismarck *Engineering Department*	Melvin J. Bullinger, P.E., City Engineer	SCALE: Not to Scale DATE: 3/2004	STANDARD DETAIL NO. **1212-1**

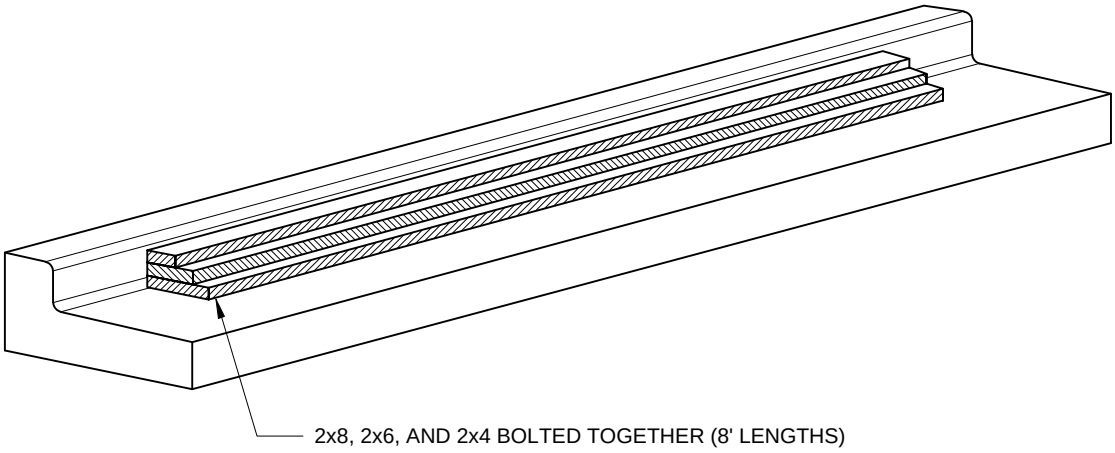

TEMPORARY CURB MOUNT DETAIL

Bismarck *Engineering Department*	Melvin J. Bullinger, P.E., City Engineer	SCALE: Not to Scale DATE: 1/2003	STANDARD DETAIL NO. **MISC.-1**

North Dakota Income Tax Clearance or Account Number _____

Expiration Date of Certification _____

A G R E E M E N T

THIS AGREEMENT, made and entered into this « » day of « », 2011, by and between the City of Bismarck, a municipal corporation, hereinafter called the "CITY," and «company», with its office at «city», North Dakota, hereinafter called the "CONTRACTOR."

The parties hereto, in consideration of the mutual agreement contained, mutually undertake, promise, and agree for themselves, their respective representatives, successors, and assigns, as follows:

ARTICLE I

The Contractor shall furnish the materials and perform the work for «type of improvement», for the City of Bismarck, Burleigh County, North Dakota, in strict accord with the agreement as herein defined.

ARTICLE II

The following shall be deemed a part of this agreement:

1. The proposal for bids, instructions to bidders, and requirements for bidders;
2. The bid of the Contractor;
3. The Agreement;
4. The general provisions;
5. The specifications;
6. The contract drawings;
7. The bid bond, performance, and payment bonds and maintenance bond, if any;
8. Certificate of Insurance;
9. All addenda issued by the engineers prior to receipt of bids;
10. Notice of award;
11. Resolution of City awarding the bid;
12. All provisions required by law to be inserted in this contract whether actually inserted or not.

All of the above taken as a whole shall constitute the agreement documents.

ARTICLE III

The City agrees to pay the Contractor for the performance of this Agreement according to the schedule of approximate quantities, the aggregate of which is estimated to be

approximately $«amount». Payments are to be made as per specifications upon presentation of the proper certification of the Engineer or his representative and by the terms of this agreement. (Please see attachment.)

ARTICLE IV

All provisions of the contract relating to time of performance and completion of the work are of the essence of this contract. Accordingly the Contractor shall begin work on a date to be specified in a written order from the Board of City Commissioners and shall fully and entirely perform this contract, and all work incidental thereto; and all work completed no later than «date». All intermediate completion dates specified in the proposal shall also be adhered to.

ARTICLE V

During the performance of this contract, the Contractor agrees as follows:

(1) The Contractor will not discriminate against any applicant for employment because of race, creed, color, or national origin. The Contractor will take affirmative action to ensure that applicants are employed, and that employees are treated fairly during employment, without regard to their race, creed, color, or national origin. Such action shall include, but not be limited to, the following: employment, upgrading demotion or transfer; recruitment or recruitment compensation; and selection for training including apprenticeship. The Contractor agrees to post in conspicuous places, available to employees and applicants for employment, notices to be provided by the contracting officer setting forth the provisions of this nondiscrimination clause.

(2) The Contractor will, in all solicitations or advertisements for employees placed by or on behalf of the Contractor, state that all qualified applicants will receive consideration for employment without regard to race, creed, color, or national origin.

(3) The Contractor will send to each labor union or representative of workers with which he has a collective bargaining agreement or other contract or understanding, a notice, to be provided by the agency contracting officer, advising the labor union or workers' representative of the contractors' commitments under Section 202 of Executive Order No. 11246 of September 24, 1965, and shall post copies of the notice in conspicuous places available to employees and applicants for employment.

(4) The Contractor will comply with all provisions of Executive Order No. 11246 of September 24, 1965, and the rules, regulations, and relevant orders of the Secretary of Labor.

(5) The Contractor will furnish all information and reports required by Executive Order No. 11246 of September 24, 1965, and by the rules, regulations, and orders of the Secretary of Labor, or pursuant thereto, and will permit access to his books, records,

and accounts by the contracting agency and the Secretary of Labor for purposes of investigation to ascertain compliance with such rules, regulations, and orders.

(6) In the event of the Contractor's noncompliance with the nondiscrimination clauses of this contract or with any of such rules, regulations, or orders, this contract may be canceled, terminated, or suspended in whole or in part and the Contractor may be declared ineligible for further Government contracts in accordance with procedures authorized in Executive Order No. 11246 of September 24, 1965, and such other sanctions may be imposed and remedies involved as provided in Executive Order No. 11246 of September 24, 1965, or by rule, regulations, or order of the Secretary of Labor, or as otherwise provided by law.

(7) The Contractor will include the provisions of Paragraphs (1) through (7) in every subcontract or purchase order unless exempted by rules, regulations, or orders of the Secretary of Labor issued pursuant to Section 204 of Executive Order No. 11246 of September 24, 1965, so that such provisions will be binding upon each subcontractor or vendor. The Contractor will take such action with respect to any subcontract or purchase order as the contracting agency may direct as a means of enforcing such provisions including sanctions for noncompliance: Provided, however, that in the event the Contractor becomes involved in, or is threatened with, litigation with a subcontractor or vendor as a result of such direction by the contracting agency, the Contractor may request the United States to enter into such litigation to protect the interests of the United States.

ARTICLE VI

During the performance and up to the date of final acceptance, the Contractor shall be under an absolute obligation to protect any damage, loss or injury; and, in the event of such damage, loss or injury, he shall promptly replace or repair such work, whichever the (Engineer) shall determine to be preferable. The obligation to deliver finished work in strict accordance with the contract prior to final acceptance shall be absolute and shall not be affected by the (Engineer's) approval of or failure to prohibit means and methods of construction used by the Contractor.

The Contractor shall be responsible for maintenance and operation of all constructed facilities until final acceptance unless otherwise noted in specifications, notes, or special provisions. This includes locating of contractor constructed underground facilities.

The Contractor must take all reasonable precautions to protect the persons and property of others on or adjacent to the site from damage, loss, or injury resulting from his operations under this contract.

Within three days after notice to him of the happening of any such loss, damage, or injury, the Contractor shall make a full and complete report thereof in writing to the Engineer.

If the persons or property of others on or adjacent to the site sustain loss, damage or injury resulting directly or indirectly from the work of the Contractor, or his subcontractors, in their performance of this contract, or from his or their failure to comply with any of the provisions of this contract or of law, the Contractor shall indemnify and hold the City harmless from any and all claims and judgments for damage and from costs and expenses to which the City may be subjected or which it may suffer or incur by reason thereof.

The Contractor agrees to indemnify and save harmless the City of Bismarck, its appointed and elective officers and employees, from and against all loss or expense, including attorney's fees and costs by reason of liability imposed by law upon the City, its elected or appointed officials or employees for damages because of bodily injury including death at any time resulting therefrom sustained by any person or persons and on account of damage to property including loss of use thereof, arising out of or in consequence of the performance of this work, whether such injuries to persons or damage to property is due to the negligence of the Contractor, his agents or employees, his subcontractors, their employees, City of Bismarck, its appointed or elected officers, employees, or their agents, except only such injury or damage as shall have been occasioned by sole negligence of the City, its appointed or elected officials or employees.

The City may suspend or terminate the Agreement, in whole or in part, and suspend work at any time, re-let work to be completed, or order the reconstruction of any part or all of the work improperly done for improper construction or non-compliance with the terms of the agreement. The decision of the City upon any questions connected with the execution of this Agreement or any failure or delay in the prosecution of the work by the Contractor shall be final and conclusive.

Whenever the City determines to suspend or terminate any of the provisions of the Agreement or to suspend work, re-let work, or order the reconstruction of any part or all of the work, the City shall promptly notify the Contractor in writing of the determination and the reasons for the action, together with the effective date.

The Contractor shall give preference, pursuant to North Dakota Century Code Subsection 43-07-20, to the employment of bona fide North Dakota residents with preference given first to honorably discharged disabled veterans of the armed forces of the United States, who are deemed to be qualified in the performance of said work. Such preference shall not apply to engineering, superintendence, management, or office or clerical work. Contracts which involve federal aid funds and where a preference or discrimination would be contrary to federal law or regulations shall be exempt from the requirements of this paragraph.

The Contractor, in employing and maintaining labor, shall do so in conformity with state and federal law and this Agreement.

IN WITNESS WHEREOF, the parties hereto have caused this instrument to be executed as of the date and year first above written.

CITY OF BISMARCK
A Municipal Corporation

(SEAL)

_____
President, Board of City Commissioners

Attest: _____
City Administrator

_____
Date Signed

* * * *

SECTION 1402 - BID BOND

KNOW ALL MEN BY THESE PRESENTS, that we _____ _____, hereinafter called the Principal, as Principal, and the _____ _____ of _____, a corporation duly organized under the laws of the State of _____, hereinafter called the Surety, as Surety, are held or firmly bound unto _____ _____ _____, hereinafter called the Obligee, in the sum of _____ _____ Dollars ($_____), for the payment of which sum well and truly to be made, the said Principal and the said Surety, bind ourselves, our heirs, executors, administrators, successors, and assigns, jointly and severally, firmly by these presents.

NOW, THEREFORE, if the Obligee shall accept the bid of the Principal, and the Principal shall enter into a Contract with the Obligee in accordance with the terms of such bid, and give such bond or bonds as may be specified in the bidding of the Contract Documents with good and sufficient surety and material furnished in the prosecution thereof or in the event of the failure of the Principal to enter such contract and give such bond or bonds, if the Principal shall pay to the Obligee the difference not to exceed the penalty hereof between the amount specified in said bid, and such larger amount for which the Obligee may in good faith contract with another party to perform the work covered by said bid, then this obligation shall be null and void, otherwise to remain in full force and effect.

SIGNED AND SEALED THIS _____ day of _____, 20__.

In the presence of:

_____(Seal)
Principle

_____
Witness

_____
Title

_____
Witness

_____(Seal)
Surety

_____
North Dakota Agent

_____
Title

SECTION 1403 - PERFORMANCE BOND

KNOW ALL MEN BY THESE PRESENTS that _____
_____
(Here insert the name and address or legal title of the Contractor)

as Principal, hereinafter called the Contractor, and _____
_____
(Here insert the legal title of Surety)

as Surety, hereinafter called the Surety, are held and firmly bound unto _____
_____
(Here insert the name and address or legal title of the Owner)

as Obligee, hereinafter called the Owner, in the amount of _____
_____ Dollars ($_____) for the payment whereof the Contractor and the Surety bind themselves, their heirs, executors, administrators, successors and assigns, jointly and severally, firmly by these presents.

WHEREAS, the Contractor has by written agreement, dated _____, 20__, entered into a contract with the Owner for _____
_____
_____
Here insert full name and title)

which Contract is by reference made a part hereof, and is hereinafter referred to as the Contract.

NOW THEREFORE, THE CONDITION OF THIS OBLIGATION is such that, if the Contractor shall promptly and faithfully perform said Contract, then this obligation shall be null and void; otherwise it shall remain in full force and effect.

a) The Surety hereby waives notice of any alteration or extension of time made by the Owner.

b) Whenever the Contractor shall be and declared by the Owner to be in default under the Contract, the Owner having performed the Owner's obligations thereunder, the Surety may promptly remedy the default, or shall promptly

   1) Complete the Contract in accordance with its terms and conditions, or

   2) Obtain a bid or bids for submission to the Owner for completing the Contract in accordance with its terms and conditions, and upon determination by Owner and Surety of the lowest responsible bidder, arrange for a contract between such bidder and Owner, and make available as work progresses (even though there should be a default or a

succession of defaults under the contract or contracts of completion arranged under this paragraph) sufficient funds to pay the cost of completion less the balance of the Contract price, including others costs and damages for which the Surety may be liable hereunder, but not exceeding the amount set forth in the first paragraph hereof. The term "balance of the Contract price" as used in this paragraph shall mean the total amount payable by the Owner to the Contractor under the Contract and any amendments thereto, less the amount properly paid by the Owner to the Contractor.

c) Any suit under this bond must be instituted before the expiration of two (2) years from the date on which final payment under the Contract falls due.

d) No right of action shall accrue on this bond to or for the use of any person or corporation other than the Owner named herein or the heirs, executors, administrators or successors of the Owner.

SIGNED AND SEALED THIS _____ day of _____, 20___.

In the presence of:

_____(Seal)
Principle

_____
Witness

_____
Title

_____
Witness

_____(Seal)
Surety

_____
North Dakota Resident Agent

_____
Title

SECTION 1404 - PAYMENT BOND

KNOW ALL MEN: That we _____
_____
hereinafter called the Principal, and _____
_____
_____ and
_____
_____
_____ and
hereinafter called the Surety or Sureties, are held and firmly bound onto _____
_____
hereinafter called the Owners, and to such persons, firms and corporations who may furnish materials for, or perform labor on the work, building or improvements, contemplated in the contract hereinafter mentioned, in the sum of _____
_____
_____ Dollars ($_____) for the payment whereof the Principal and Surety, or Sureties, bind themselves, their heirs, executors, administrators, successors and assigns, jointly and severally, firmly by these presents.

WHEREAS, the Principal has by means of a written agreement dated _____ entered into a contract with the Owner for _____
_____
a copy of which Agreement is by reference made a part hereof.

NOW THEREFORE, the conditions of this obligation are such that if the Principal shall faithfully perform the Contract on his part, and satisfy all claims and demands incurred for the same and shall fully indemnify and save harmless the Owner from all costs and damage which he may suffer by reason of failure so to do and shall fully reimburse and repay the Owner all outlay and expense which the Owner may incur in making good any such default and shall promptly make payment to all persons supplying labor or material for use in the prosecution of the work provided for in such contract, then this obligation shall be null and void; otherwise, it shall remain in full force and effect.

AND PROVIDED, that any alterations which may be made in the terms of the Contract, or in the work to be done under it, or the giving by the Owner of any extension of time for the performance of the Contract or any other forbearance on the part of either the Owner or the Principal to the other shall not in any way release the Principal and the Surety, or Sureties, or either or any of them, their heirs, executors, administrators, successors or assigns from their liability hereunder, notice to Surety, or Sureties, of any alteration, extension or forbearance being hereby waived.

This bond is made for the use and benefit of all persons, firms and corporations who may furnish any material or perform any labor for or on account of said work, building or improvements and they and each of them are hereby made obligees hereunder the

same as if their own proper names were written herein as such, and they and each of them may sue hereon.

Signed and Sealed this _____ day of _____ 20__.

In the presence of:

_____	_____(Seal)
	as to
_____	_____
_____	_____(Seal)
	as to
_____	_____
_____	_____(Seal)
	as to
_____	_____

CITY OF BISMARCK ENGINEERING DEPARTMENT

Contract Progress Schedule

Project No. _____ **Original Contract Amount** _____

Proposed Start Date _____ **Proposed Completion Date** _____

Contractor _____

TENTATIVE WORK SCHEDULE

Major Work Elements	% of Contract Cost	Working Days																													% Comp
		5	10	15	20	25	30	35	40	45	50	55	60	65	70	75	80	85	90	95	0 0	5	10	15	20	25	30	35	40	45	
																															100
																															95
																															90
																															85
																															80
																															75
																															70
																															65
																															60
																															55
																															50
																															45
																															40
																															35
																															30
																															25
																															20
																															15
																															10
																															5
																															0

Approved By _____ **Date** _____

City Engineer

_____ **Date** _____

Contractor

CITY OF BISMARCK

EXTRA WORK ORDER

Work Order No._____ Date_____

Contractor_____ Project_____

_____ _____

_____ _____

You are hereby authorized to complete the following extra work in accordance with the specifications as directed by the Engineer.

Location and description of work:_____

_____

_____

Said extra work shall be paid for as stipulated below:

Unit Prices (list below) ____

Lump Sum (list below) ____

Force Account per Section 126
of General Provisions ____

_____

_____

_____

The following subcontractors are approved for this work order:_____

_____

Remarks_____

_____

Work Order Issued by_____ Title_____

Work Order Completed_____ Accepted by_____

Date_____

CITY OF BISMARCK ENGINEERING DEPARTMENT

Force Account Summary

Date _____ **Contractor** _____

Project No. _____ **Change Order No.** _____

Description of Work _____

_____

_____

Date of Work	Cost Plus Items (Attach Itemized Statements)		Equipment (Attach Itemized Statement)
	Labor	Material	
Subtotal	a	f	i

Labor (Contractor's Direct Costs) _____ **a** _____

20% of Labor (a) (Contractors Percentage) _____ **b** _____

% of Labor (a) for (Breakdown must be submitted to establish percentage) _____ **c** _____

6% of (c) _____ **d** _____

Other Labor Costs (Operator, Truck Driver, Union, Health, Welfare,etc.) _____ **e** _____

Total Labor Costs (a+b+c+d+e) _____ **f** _____

Materials (Contractor's Cost) _____ **g** _____

15% of (g) Materials Costs (excluding sales tax) _____ **h** _____

Total Materials Costs _____ **i** _____

Equipment _____ **j** _____

Total This Summary Sheet _____

CITY OF BISMARCK ENGINEERING DEPARTMENT

Extra Work - Labor

Date _____ **Contractor** _____

Project No. _____ **Force Acct. No.** _____

Description of Work _____

Employee's Name	Labor Classification & Number	Starting Time a.m.	Starting Time p.m.	Ending Time a.m.	Ending Time p.m.		Hours	Rates	Amount
						ST			
						OT			
						ST			
						OT			
						ST			
						OT			
						ST			
						OT			
						ST			
						OT			
						ST			
						OT			
						ST			
						OT			
						ST			
						OT			
						ST			
						OT			
						ST			
						OT			
						ST			
						OT			
	Total Labor								

I hereby certify that the above labor was used on force account work named in designated order, for the hours indicated. Hours and Rates of straight and over time will be completed later using the contractors payrolls, and those rates for labor will not exceed those for comparable labor currently employed on the project.

_____ _____

Inspector **Contractor's Representative**

CITY OF BISMARCK ENGINEERING DEPARTMENT

Extra Work - Equipment

Date _____ **Contractor** _____

Project No. _____ **Force Acct. No.** _____

Description of Work _____

Type and Capacity of Equipment	Starting Time a.m.	Starting Time p.m.	Ending Time a.m.	Ending Time p.m.	Hours	Rental Rate	Amount

I hereby certify that the equipment listed above was actually used on force account work named in designated order and for the hours indicated. Rental Rate and Amount shall be completed later using the Department Rental Rates.

_____ **Inspector**

_____ **Contractor's Representative**

CITY OF BISMARCK ENGINEERING DEPARTMENT

Extra Work - Materials

Date _____ **Contractor** _____

Project No. _____ **Force Acct. No.** _____

Description of Work _____

Item	Quantity	Unit	*Unit Price	*Amount
Sub-Total Cost of Materials				
Sales Tax				
Total Cost of Materials				

I hereby certify that the materials listed above were actually used on force account work named in designated order and that the unit price and amount shown represents the actual cost of materials as shown on a copy of contractor's certified invoices.

* To be completed after contractor has furnished a copy of the certified invoices.

_____ _____

Inspector **Contractor's Representative**